WHOI-98-01

# Woods Hole Oceanographic Institution

# Development of an Autonomous Aerosol Sampler for Ocean Buoys and Land Sites

by

Edward Sholkovitz, Geoffrey Allsup, Richard Arthur, and David Hosom

Woods Hole Oceanographic Institution
Woods Hole, MA 02543

and

Kevin McKenney

Undergraduate Student, Dept. of Mechanical Engineering
Massachusetts Institute of Technology
Cambridge, MA 02139

January 1998

## Technical Report

Funding was provided by the National Science Foundation through Grant No. OCE-943212.

Approved for public release; distribution unlimited.

19980413 037

DTIC QUALITY INSPECTED 3

# WHOI-98-01

## Development of an Autonomous Aerosol Sampler for Ocean Buoys and Land Sites

Edward Sholkovitz, Geoffrey Allsup, Richard Arthur, and David Hosom

Woods Hole Oceanographic Institution
Woods Hole, MA 02543

and

Kevin McKenney

Undergraduate Student, Dept. of Mechanical Engineering
Massachusetts Institute of Technology
Cambridge, MA 02139

January 1998

## Technical Report

Funding was provided by the National Science Foundation through
Grant No. OCE-943212.

Reproduction in whole or in part is permitted for any purpose of the United States Government. This report should be cited as Woods Hole Oceanog. Inst. Tech. Rept., WHOI-98-01.

Approved for public release; distribution unlimited.

**Approved for Distribution:**

**Michael Bacon, Chair**

Department of Marine Chemistry and Geochemistry

DTIC QUALITY INSPECTED 4

## Table of Contents


| | | |
|---|---|---|
| | Abstract | 2 |
| I. | Summary | 3 |
| II. | Introduction: Scientific Applications and Objectives | 4 |
| III. | Buoys as Research Platforms for Atmospheric Chemistry | 5 |
| IV. | Designing an Aerosol Sampler for Buoys | 7 |
| V. | Overview of the Whole System and Basics of Operation | 8 |
| VI. | Details of the Components and Operational Protocol | 12 |
| | a. Filter and Control Modules | 12 |
| | b. Meteorological Sensors and Data Transmission | 20 |
| | c. Minimizing Contamination for Trace Constituents of Aerosol | 21 |
| | d. Rate of Air Filtering and Sample Size | 21 |
| | e. Filter Types and Flow Rates | 22 |
| VII. | Tower Test on Bermuda | 24 |
| | a. Physical Set-Up and Sampling Protocol | 24 |
| | b. Comparison of WHOI and AEROCE Aerosol Samplers | 27 |
| VIII. | Sea Tests on a Buoy | 28 |
| | a. Overview | 28 |
| | b. Meteorological Data and Their Interface to the Aerosol Sampler | 32 |
| | c. Five Day Filtration of Aerosols with the Buoy-Mounted Sampler | 37 |
| | d. Overturning of the Buoy during a Storm | 39 |
| IX. | Future Directions | 42 |
| X. | Acknowledgments | 44 |
| XI. | References | 45 |
| XII. | Appendix | 49 |
| | A-1. Control Module and Filter Module | 49 |
| | A-II. Junction Box on Bermuda Tower | 50 |
| | A-III. Rain Detector on Buoy | 50 |
| | A-IV. Microprocessor/Controller Hardware | 58 |
| | 1. Introduction | 58 |
| | 2. Sample Controller Unit (SCU) | 58 |
| | 3. Tattle Tale 8 Control Board | 64 |
| | 4. RS-485 and A/D Expansion Interface | 64 |
| | 5. Individual Dust Sample Unit (DSU) | 67 |
| | 6. Dust Sample Unit Controller Board | 67 |
| | A-V. Software | 69 |
| | List A-1: vrbls.c | 71 |
| | List A-2: struct.dec | 73 |
| | List A-3: dbxmain.c | 75 |
| | List A-4: procmnd.c | 80 |
| | List A-5: dpicmain.c | 84 |
| | List A-6: dctlmain.c | 86 |
| | List A-7: dbascd.c | 90 |

## Abstract

The authors have successfully designed, built and tested an aerosol sampler which is capable of collecting, in an unattended manner, a time-series set of aerosol samples (aerosol-embedded filters) from moored ocean buoys and remote areas on land. Research on aerosols, in particular, and atmospheric chemistry, in general, has not been previously attempted from buoys. Aerosols entering and leaving the ocean play an important role in climate change, ocean productivity, pollutant transport and atmospheric optics.

This report discusses (1) the scientific applications of a buoy-mounted aerosol sampler, (2) the advantages of using buoys as research platforms and (3) the authors' new instrument. Also discussed are the results of a four month test of the aerosol sampler on the AEROCE (*Atmosphere/Ocean Chemistry Experiment*) tower in Bermuda and the results of a three month test on a buoy moored in Vineyard Sound off Woods Hole, MA, USA. The direct comparison between WHOI filters and AEROCE filters from the Bermuda tower is very encouraging as the Fe concentrations of aerosols compare to within 10-15% over a wide range of values. Aerosol sampling from a buoy moored in coastal waters was successfully tested under a variety of atmospheric and oceanic conditions.

## I. Summary

The ocean/atmosphere boundary is of critical importance in the fields of atmospheric, ocean and climate research and vital to our understanding of climate change, ocean productivity, and pollutant transport. Studying this interface is difficult in logistical, technological and scientific senses. The lower marine atmospheric boundary layer (L-MABL) - defined here as 1-10 m above the sea surface - is a region of complex and dynamic processes. The episodic production, transport and removal of aerosols is the key problem with respect to both properly sampling aerosols and to better understanding the processes controlling the composition and abundance of aerosol particles transiting the surface of oceans (and lakes) through the L-MABL.

With funding from the National Scientific Foundation, the authors have successfully designed, built and tested an aerosol sampler which is capable of collecting, in an unattended manner, a time-series set of aerosol samples (aerosol-embedded filters) from moored ocean buoys and remote areas on land. Research on aerosols, in particular, and atmospheric chemistry, in general, has not been previously attempted from buoys. The idea of an aerosol sampler arose when the first author observed large amounts of reddish brown (Saharan) dust stuck to meteorological sensors mounted on buoys deployed off northwest Africa. This implied that buoys could be used as platforms for the more precise sampling of continental dust depositing on the oceans. This report discusses the scientific applications of a buoy-mounted aerosol sampler and the advantages of using buoys as research platforms and describes the authors' new instrument. This report also discusses the results of a four month test of the aerosol sampler on the AEROCE (*Atmosphere/Ocean Chemistry Experiment*) tower in Bermuda and the results of a three month test on a buoy moored in Vineyard Sound off Woods Hole, MA, USA.

Although several companies manufacture aerosol samplers that are designed to work in the field on land sites, and some even have a time-series capability, none are robust enough to work on an ocean buoy. Moreover, none have many of the engineering features and computer control systems that are needed to sample unattended in remote and hostile regions using battery and solar power. All of the above features make the final product well suited to remote land sites where one requires time-series sampling of aerosols. Monitoring a radioactive disposal site in mountainous or desert regions is one example.

While the focus of this report is on technology, the scientific questions being addressed are fundamental in nature and have a large range of applications in marine and atmospheric sciences. Advancements in science are driven, in certain cases like this project, by advancements in technology.

## II. Introduction: Scientific Applications and Objectives

The term *aerosol* refers to an assembly of solid or liquid particles, ranging in size from 0.001 to over 100 μm, suspended in air. The most common types of aerosols are mineral dust, seasalt particles, organic particles, soot, fine cloud condensation nuclei (CCN) particles, fog and clouds. Aerosols have natural sources (oceans, desert, soil, vegetation, forest fires, volcanoes) and anthropogenic sources (combustion of gasoline, oil coal and charcoal, biomass burning, cement production, agriculture dust, smelting). Another source of environmentally important aerosols is gas-to-particle conversion. The most prominent example is the formation of non-seasalt sulfate (NSS) particles from the oxidation of $SO_2$

In addition to playing substantial roles in the earth's radiation balance and climate and atmospheric chemistry (Andreae, 1996; Andreae and Crutzen, 1997), aerosols are involved in important processes in biological and chemical oceanography. Examples, most pertinent to the development of a buoy-mounted aerosol sampler, are outlined below.

1. Certain marine phytoplankton release gaseous dimethylsulfide (DMS) which is transported across the ocean/atmosphere boundary to the marine boundary layer where atmospheric chemical reactions convert DMS to NSS particles. This combination of biology, biogeochemistry, physical transport and atmospheric chemistry leads to the oceans being the major source of NSS aerosols which are important cloud forming CCN (The CLAW hypothesis of Charlson et al., 1987). The lack of a significant correlation between the concentrations of phytoplankton and DMS in seawater points to the complexity of the processes involved in this cycle (Andreae and Crutzen, 1997 and reference therein). Research into the atmospheric cycle of sulfur over the oceans remains an important topic (Yvon et al., 1996). Data from buoys, not only on non-seasalt sulfate (NSS) aerosols but also on the gases DMS, $SO_2$ and ozone, could provide valuable insights into the biogeochemical cycle of sulfur.

2. Seasalt particles are also involved in complex heterogeneous reactions in the troposphere which are thought to deplete the ozone concentrations in the marine boundary layer of the polar regions. This is a new area of research (Andreae and Crutzen, 1997 and references therein).

3. Dust originating from Asia and Africa is transported across large expanses of the North Pacific and Atlantic Ocean (Arimoto et. al., 1989,1992; Prospero et al., 1989). The deposition of dust on the oceans varies greatly in both time and space with episodic and strong seasonal pulses being dominant features. The *Iron hypothesis* is built around the argument that phytoplankton production in large regions of world's oceans is limited by iron which, in turn, has continental dust as it main source (Coale et al., 1996; Duce and Tindale, 1991; DiTullio and Laws, 1991; Donaghay et al., 1991; Martin *et al.*, 1991).

4. Aerosols of dust, organic matter and soot can be important sources of trace metals and anthropogenic organic compounds to lakes, estuaries and oceans (Arimoto et al., 1989; Duce *et al.*, 1991; Church et al., 1990; Vernon et al., 1990). The organic contaminant PCBs (polychlorinated biphenyls), for example, are introduced to the Great Lakes primarily through the atmosphere (Eisenreich, 1987). Another classic example is the increase and then decrease over the past two decades of atmospheric lead deposition to the western North Atlantic Ocean following the conversion to unleaded gasoline (Wu and Boyle, 1997).

5. While it has been long recognized that anthropogenic sulfate aerosols play an important role in the radiation balance, Li *et al* (1996), Tegen *et al.* (1996), Sokolik and Toon (1996) and Andreae (1996) have argued that human activities, in particular land use practices, have increased the Earth's radiative forcing by increasing the concentration of atmospheric mineral aerosols. They note the large uncertainties involved in estimating the load and the optical properties of *anthropogenic* mineral aerosols. In calling for a system of observation platforms, Andreae states "... even worse, we have no system of sufficient coverage and accuracy in place to allow scientists thirty years from now to assess whether aerosol burdens have changed since the present." Buoy-mounted samplers may offer the potential to make long-term measurements of mineral aerosols in strategic regions of the world.

6. Seasalt aerosols have importance in fields of cloud physics, climate (heat and water balances), air pollution and atmospheric optics (Andreas *et al.*, 1995) and in the Navy's Aerosol Model (De Leeuw *et al.*, 1989). Considerable research continues on quantifying and modeling the relationship between winds and waves and the production, deposition and transport of sea spray, droplets and seasalt aerosols (Edson, 1994; De Leeuw, 1986, Fairall and Davidson, 1986; Fitzgerald, 1991; Monahan, 1986; Monahan *et al.*, 1983, 1986; Woodcock, 1948; Wu, 1990a, b). Studies off buoys could result in some of the first *in-situ* measurements of aerosol production, evolution, and transport mechanisms with high temporal variability.

## III. Buoys as Research Platforms for Atmospheric Chemistry

The deployment of meteorological and physical oceanographic instruments from moored buoys is a well established and an important tool in studies of marine meteorology, atmosphere-ocean interactions and upper ocean physics (Rudnick et al., 1997; Weller *et al.*, 1991). An emerging field of research in chemical and biological oceanography is centered on developing analytical instruments and samplers which can be deployed under moored buoys (Dickey et al., 1997; Rudnick et al., 1997). The Bermuda Testbed Mooring program is allowing for the testing of in-water chemical analyzers from the ALTOMOOR buoy (Dickey, 1996; Dickey *et al.*, 1997; Dickey et al., in review). The goal of such systems is to better understand the processes connecting meteorology and physical oceanography to biological and chemical

oceanography by acquiring simultaneous time-series data for important physical, optical, biological and chemical parameters in the upper water column. Small, self-calibrating and less energy-demanding analytical instruments capable of long-term deployments from buoys are being tested and developed for the measurements of bio-optical properties, dissolved oxygen, $CO_2$, nitrate, phosphate, Fe and Mn (Dickey et al., 1997; DeGrandpre, 1993; Elrod *et al.*, 1991; Marra *et al.*, 1992; Obata *et al.*, 1993; Rudnick et al., 1997; Wallace and Wirick, 1992). Jannasch *et al.* (1996), for example, have recorded high resolution time-series data for nitrate concentration using an in-situ analyzer (Dickey et al., 1997). Wu and Boyle (1997) report time-series Pb concentrations from water samples collected under the ALTOMOOR buoy by their MITNESS sampler (Dickey et al., 1997).

While these new techniques are enhancing the understanding of water column process, there are significant questions which can only be addressed by sampling the air above a buoy. Some advantages of buoys as platforms for research in atmospheric chemistry and marine biogeochemistry are outlined below.

1. Simultaneous, long-term measurements of dust input along with a knowledge of the physical, chemical and biological variability of the upper oceans are needed to better understand the coupling between the atmospheric deposition of dust and upper ocean chemistry and biology (e.g. the Iron Hypothesis). The same principle applies to other biogeochemical cycles, an important case being the relationship between phytoplankton and DMS emissions to the marine boundary layer.

2. The ocean/atmosphere boundary and the lower section of marine boundary layer are logistically and technologically difficult regions from which to obtain data on the chemical composition and the fluxes of aerosols. Yet these two regions are critical to the scientific and environmental issues just profiled. Sampling systems 3-10 m above the sea surface on buoys are well positioned to sample these regions.

3. Buoys with aerosol sensors and samplers positioned at 3-10 m above the sea surface open up the opportunities for measuring the production and properties of sea spray, droplets and seasalt particles near to their source, the ocean surface.

4. The episodic nature of aerosol transport to and from the oceans is a real challenge to sample in a comprehensive manner. The large variability in aerosols concentrations and fluxes are difficult to capture in any systematic fashion using ships or aircraft. Shipboard studies have rarely captured a dust deposition event. Hence, the enhancement of biological production by dissolved iron released from a dust event remains a hypothesis.

5. In contrast to ships, buoys can stay on station for 3-6 months, thus providing a less expensive and alternative platform for long-term time-series research and monitoring programs and for short-term field experiments.

6. Buoys can be moved to strategic research regions. Aerosol data from islands, which have been extremely valuable in demonstrating the episodic nature of dust input to the oceans (Arimoto et al., 1992; Duce, 1989; Galloway, 1988; Prospero et al., 1989) can't be used in process-oriented studies many hundreds of miles away. Island effects must also be considered in the sampling strategy.

7. Having aerosol samplers on buoys remotely controlled from shore would open up new research possibilities. Sampling could be event-based, that is based on satellite pictures of outbreaks of dust and/or biomass burning from the continents, increased biological productivity or volcanic eruptions.

## IV. Designing an Aerosol Sampler for Buoys

Our sampler was designed to operate in unattended mode and under hostile conditions. Breaking waves, strong winds, continuous motion, rainstorms, seasalt, films, and high humidity all present a formidable engineering challenge. Our design philosophy was centered around flexibility and redundancy in the hardware and software systems, reliability and simplicity of operation and rugged housings which open under proper sampling conditions. We also designed around the requirement of "clean" aerosol samples for trace metal analysis.

While a large variety of meteorological instruments are successfully deployed from buoys (Hosom et al., 1991, 1995; Rudnick et al., 1997), no attempt had been made to design or operate aerosol samplers for buoys. Several companies manufacture aerosol samplers that are designed to work in the field, that is on land sites. Some even have a time-series capability. But none are robust enough to work on an ocean buoy. Moreover, none have many of the engineering features and computer control systems that are needed to sample unattended in remote and hostile regions. Because our buoy-mounted sampler was designed to operate in unattended mode off battery/solar power, the final product is also well suited to remote land sites where one requires time-series sampling of aerosols. Monitoring a radioactive disposal site in mountainous or desert regions is one example.

In designing a sampler which works in the time-series mode we were faced with a choice in the mode of collecting aerosols. One option was to use a conveyor belt system to bring a clean filter segment into the air filtering path. A second option was to have a set of individual sampling modules through which air is pumped. We chose the second method for the following reasons. The conveyor belt mechanisms is (1) more complex in a mechanical sense, (2) if the belt of filter material breaks as it moves into place, then the whole time-series is prematurely terminated and (3) it is harder to reduce contamination as sections of a long roll of filter are moved into place. In the end, the use of *individual filter modules* led to a simpler system where each filter of the time-series could be isolated in a clean manner before and after

sampling for aerosols. The modular structure met our criteria of being simple, rugged and reliable. Moreover, the modular design allows for the building a large system from a small system depending on the project's goal and financial resources. These points will be expanded upon in upcoming sections.

## V. Overview of the Whole System and Basics of Operation

This section will present a brief overview of the autonomous aerosol sampler. Following sections will provide more specific information into the components and operational protocols.

Our sampler was given seven months of field testing - 4 months on the AEROCE (*Atmosphere/Ocean Chemistry Experiment*) tower in Bermuda and 3 months on a buoy moored off Woods Hole, MA. The tower and buoy were instrumented for wind speed and direction, rate of precipitation and rain detection. A wireless two-way communications modem was added to the buoy system, thus enabling us to monitor the sampling progress, to remotely change the sampling parameters, and to download the meteorological data.

The aerosol sampler is modular in design and has two main components, a control module and a set of individual filter modules (Photograph 1). Each type of module has an aluminum housing, weighs 30 lb., a volume of 1 cubic foot and a footprint of 1 square foot.

Our first version was limited to five filter modules. This five sample time-series capability can be easily increased as one control module can service many more filter modules. Power on the buoy was supplied on alkaline battery packs located in the buoy well. The control and filters modules used ten 100 amp hr. 1.5 volt units; each of the ten units, consisting of 70 D cells wired in series, were wired in parallel for a 30 volt dc 500 amp-hr. battery. The r.f. modem used five 68 amp-hr. 1.5 volt units; each of the five 40 D cell units were wired in parallel for a 15 volt DC battery. The buoy safety light used one 15 v dc, 160 amp-hr. battery (70 D cells).

The control module contains a control PC board, a TattleTale computer, three 24v DC air pumps, and two mass flow meters. The three pumps and two meters provide redundancy, that is back up in case of a mechanical failure. The computer receives and stores data from a set of meteorological instruments and from the air pumps and flow meters. The filter modules are connected to the pumps through a manifold which allows for sequential sampling. The pumps, connected in tandem, pull air at a rate of 15 lpm. This rate will vary with the type of filter. Whatman #41 filters, for example, hardly decrease the flow rate where as membrane filters with 0.45 μm pore size reduce the flow to 10 lpm.

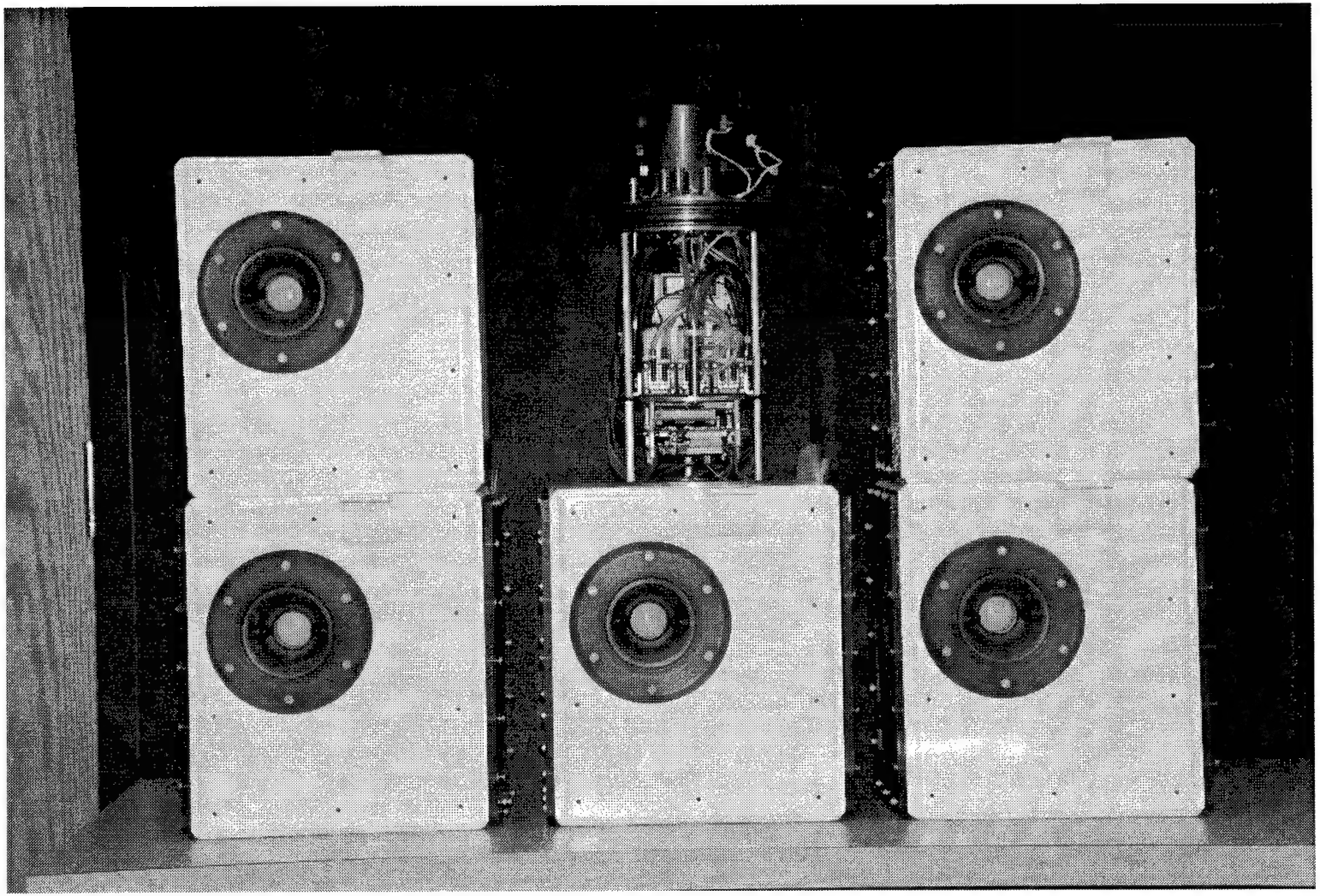

Photograph 1. Five Filter Modules and Control Module (without its casing). Front view of five filter modules shows the inlets and closed ball valves. See photograph 3 for a more detailed view of the control module.

Each filter module consists of an inlet, a motorized ball valve, an aerosol filter holder, a vacuum port and a local microcontroller (photograph 2). The polypropylene ball valve protects the filter from contamination before and after the air filtering step and seals the inside of the filter modules from inclement weather. The polypropylene aerosol holder accepts 47 mm diameter filters and screws into the back of the ball valve. Filters can be loaded into the filter modules without being touched. The airflow path is all plastic to limit contamination with respect to the measurement of trace metals. We opted for a simple funnel/tube design for the inlet which keeps the airflow path to the filter short (10 cm) and of uniform diameter (38 mm). The vane on the buoy keeps the inlets of the filter modules into the wind except under low (< 2 m/s) speeds.

The development of software was a critical component of this project. Unattended sampling must be controlled by smart and flexible software. The software developed for this application controls the duration and sequence of pulling air through the five filter modules and monitors flow rates, power consumption and meteorological conditions. Moreover, the software can respond intelligently to varying conditions of the atmosphere and oceans. For example, by monitoring a rain sensor and a wind gauge, the computer stops air filtering and closes a ball valve during periods of rain and/or high winds. High winds mean breaking waves which would lead to seasalt contamination of the filters. The housing hides the filtering modules from the inclement weather. Once weather conditions improve, the valve opens and air filtering commences. This sectoring capability is a powerful feature of our system. That is, aerosol sampling can be carried out over pre-set ranges of wind speed and direction which can be modified remotely using a wireless or satellite modem. A sampling strategy based on different ranges of humidity, sunlight or temperature could also be arranged by adding the corresponding sensors. Studies involving photochemistry might benefit from setting up a day/night sampling cycle.

With respect to long-term sampling from buoys, the availability and the consumption of power is a controlling parameter. The air pumps consume the majority of power in our sampler. Batteries remain the main power source on buoys; solar panels can provide an additional source of power by recharging the batteries. The amount of battery power depends on the design of the buoy itself. The discus buoy deployed in our sea test was not optimized with respect to battery power or a sampling platform. By using a spar buoy, there would be space for more batteries and a more steady platform for collecting aerosols.

A second issue in any time-series study is the sampling resolution needed to address the scientific questions. Key parameters are the volume of air required per sample, the number of samples required for the time-series, the ambient aerosol levels, the rate of air filtering and total deployment time. With power fixed there must be a trade off in these sampling parameters. For example, with the same amount of power one can filter five 10 $m^3$ samples or twenty-five 20 $m^3$ samples. During periods of

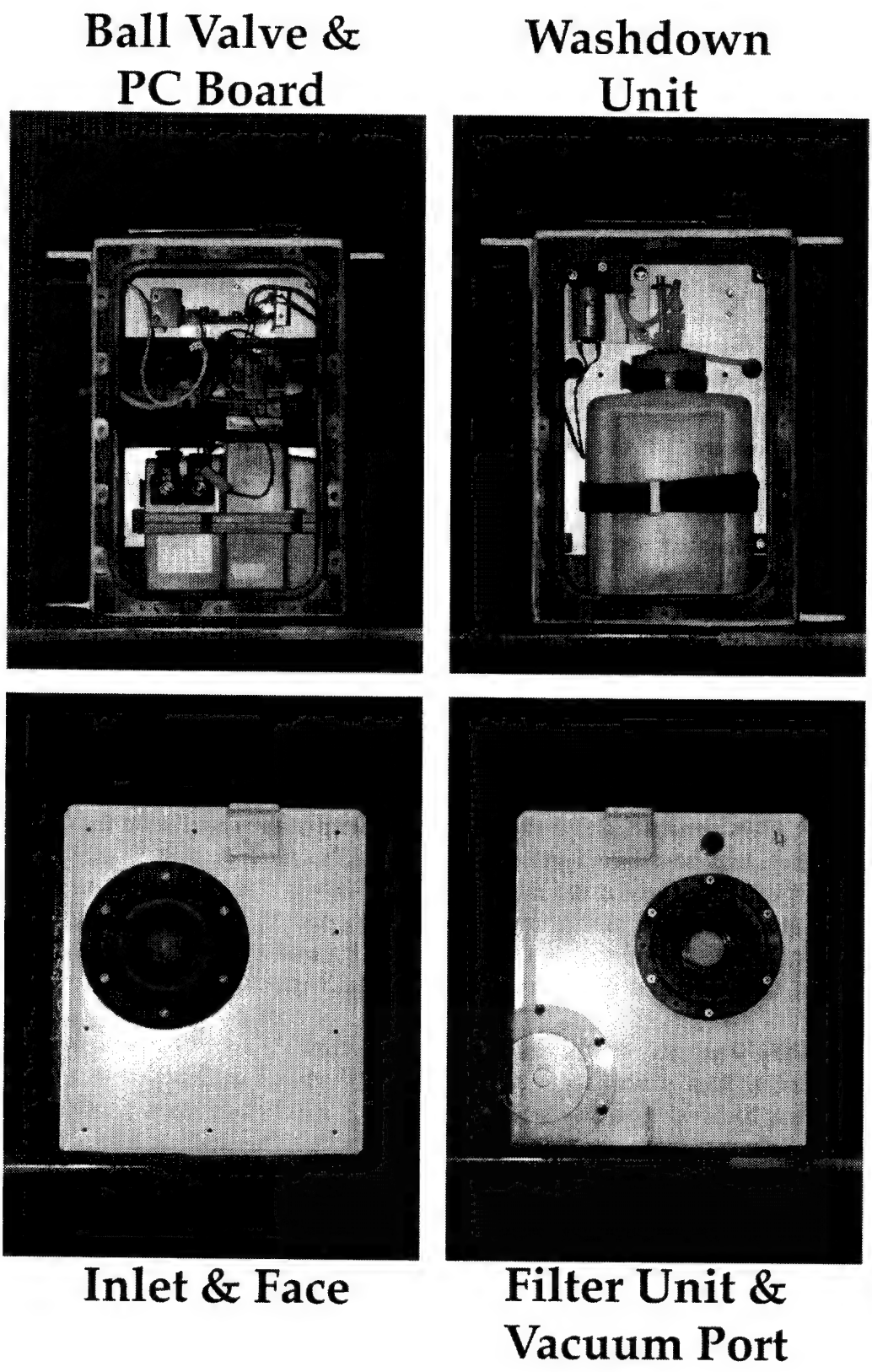


Photograph 2. A collage with four views of the control module. Each view is one side. Top left -side view with ball valve and computer interface card. Top right - side view of washdown unit consisting of a 2 liter rectangular water bottle and water pump. Bottom left - Front view of inlet with closed ball valve. Bottom right - back side showing vacuum port into which filter holders screw; plastic cover (6'' diameter) for port removed and leaning against module.

dust pulses or large seasalt production, the latter protocol would provide sufficient amount of aerosols to yield a high resolution record. The same would apply to collecting dust from a buoy positioned in the coastal region. In contrast, at the "clean" air end of the spectrum - e.g., off Hawaii or Tasmania - low resolution (1-2 weeks) sampling would be preferable. Upon an outbreak of dust from China as detected by satellite, one could switch to a higher frequency of sampling.

Our system can operate in a duty cycle mode for a minimum of 3-4 months with filtering rates of 10-20 lpm (14 - 29 $m^3$/day). A suite of many trace elements can be measured with a 50 μg sample of dust. Hence, 50 μg is a good quantity of dust to aim to be collected. If the annual mean Bermuda dust value of 1 $\mu g/m^3$ is used as a guide, this translates into 2-3 days of filtering to obtain a 50 μg sample of dust. With a next generation of smaller filter modules, this would mean having the capability of collecting 20 aerosol samples from one buoy. This leaves considerable flexibility in the sampling strategy.

## VI. Details of the Components and Operational Protocol

### a. Filter and Control Modules

Figure 1 is a block diagram of the whole system while figures 2 and 3 give more detailed schematic views of an individual filtering module and the control module. Photographs 1 and 2 show different views of the sampler on the laboratory bench including front, back and two sides of one filter module. The front view shows a closed ball valve behind the inlet. The back view is that of the vacuum and filter holder port. One side view shows the ball valve and its motor (in orange) and the other shows the washdown unit. Photograph 3 shows the control module with its housing, flow meters, pumps, air manifolds and microprocessor.

The sampler is composed of two main pieces, the control module and the set of individual filter modules, in our case five. The control module is packaged into a cylindrical Al housing (8" diameter and 24" high) and contains the control PC board, a TattleTale computer, three 24v DC air pumps, two manifolds and two mass flow meters. Power can be received from either a battery pack or an AC power plug. The computer receives and stores data from a set of meteorological instruments and from the air pumps and mass flow meters. While we used three types of meteorological sensors, more can be easily added. Redundancy is purposely built into the control module in terms of three pumps and two flow meters. The pumps pull air in tandem through a single filter module. Each pump pulls at about 4-5 lpm for a total filtering rate of 12-15 lpm. If one pump fails, then we still have the use of two pumps. While pumps with higher flow capacities could be added, they would consume more power. The rationale behind using 12 lpm is explained in a later section. The air flow through each filter is measured by two mass flow meters which are connected in series. There was no failure in either the pumps or the flow meters during the four months of

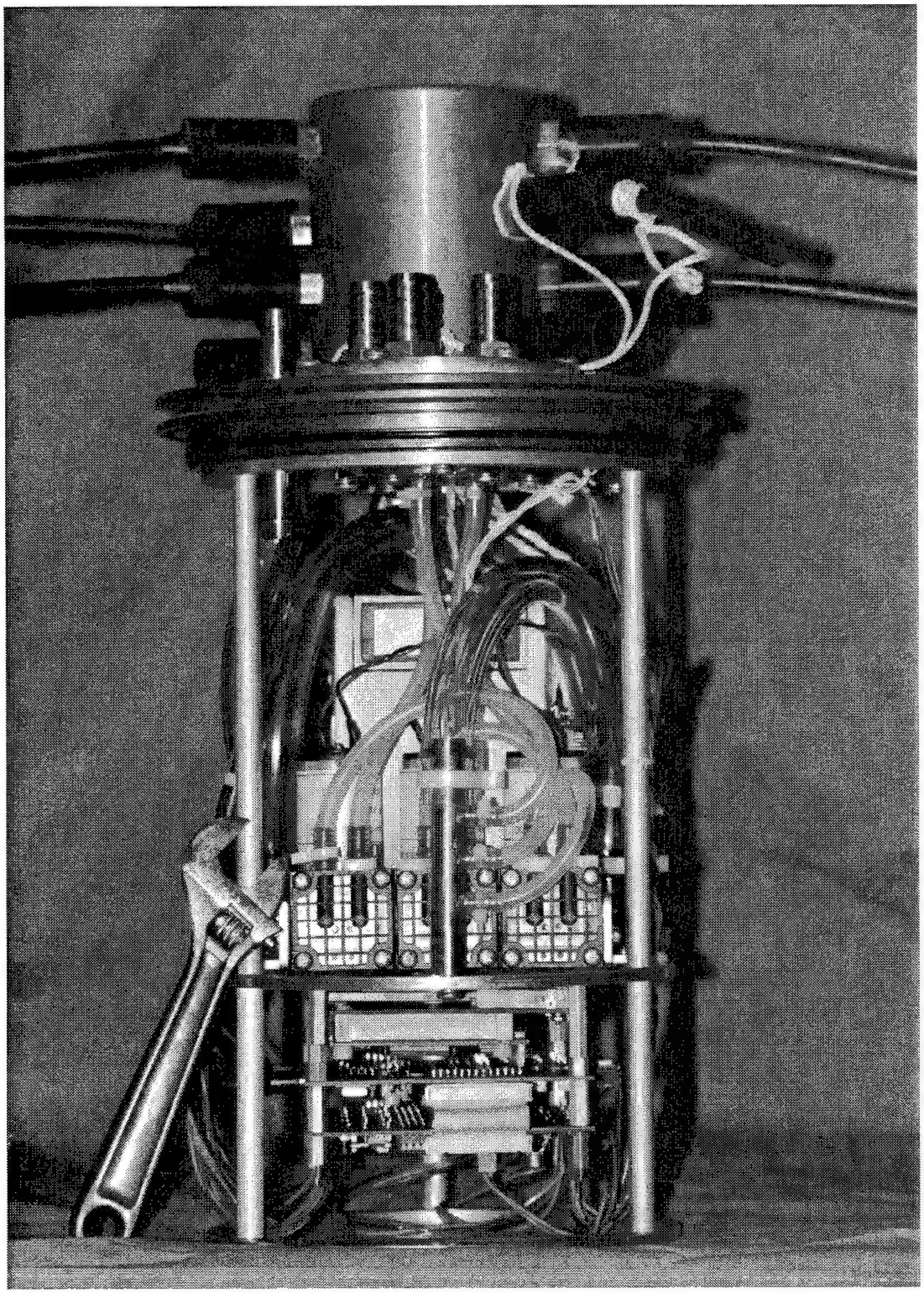

Photograph 3. Close-up of control module with its outside casing removed. Total height is 14" and diameter is 8". From bottom up one can see TattleTale 8 Processor, three air pumps with their hoses, two flow meters (the second is behind the one in view), air manifold and electrical connectors for meteorological sensors, power and the five filter modules.

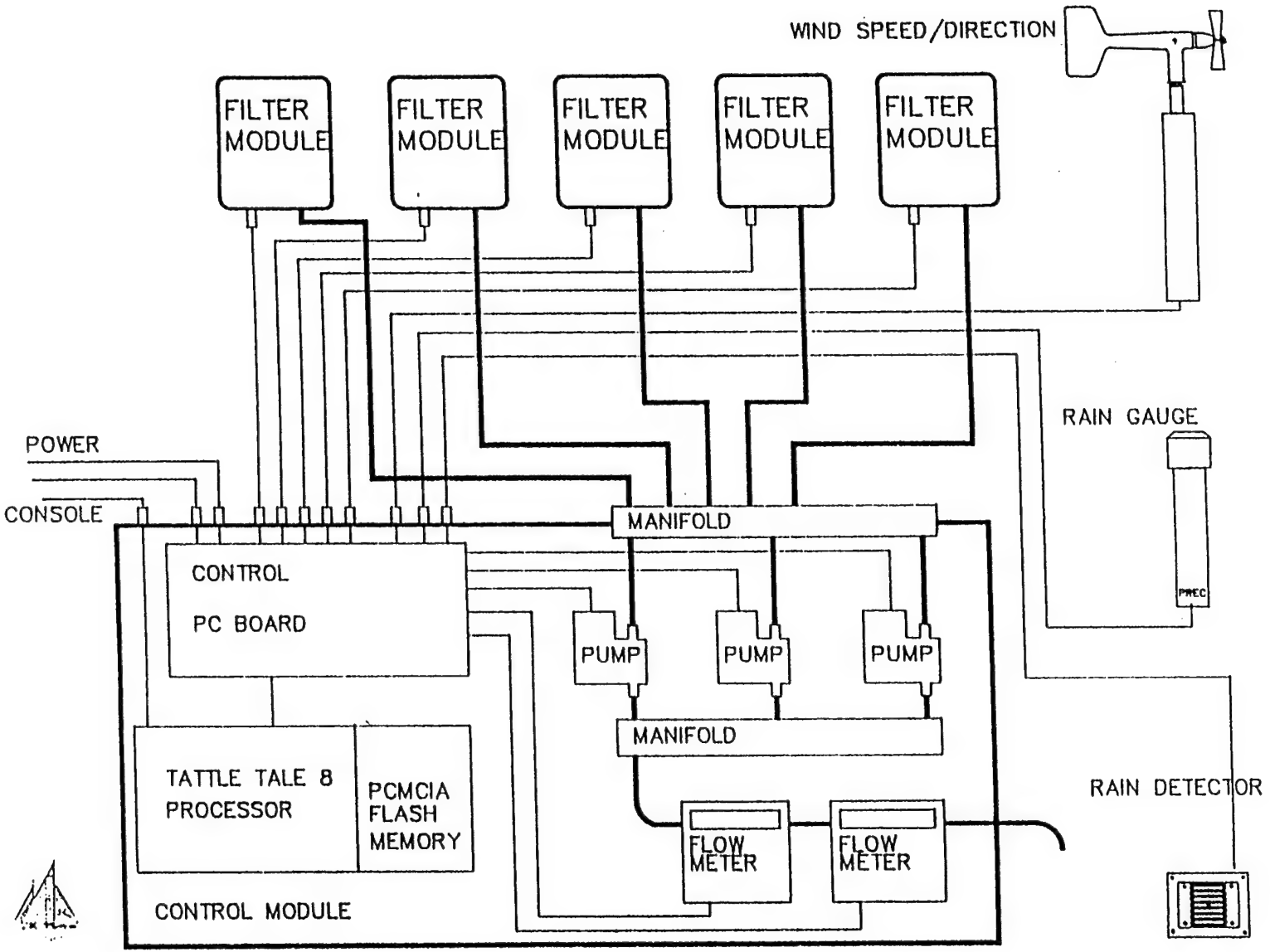


**Figure 1. Block Diagram of Whole System: Control Module, Filter Modules and Meteorological Sensors**

**Figure 2. Block Diagram of a Filter Module**

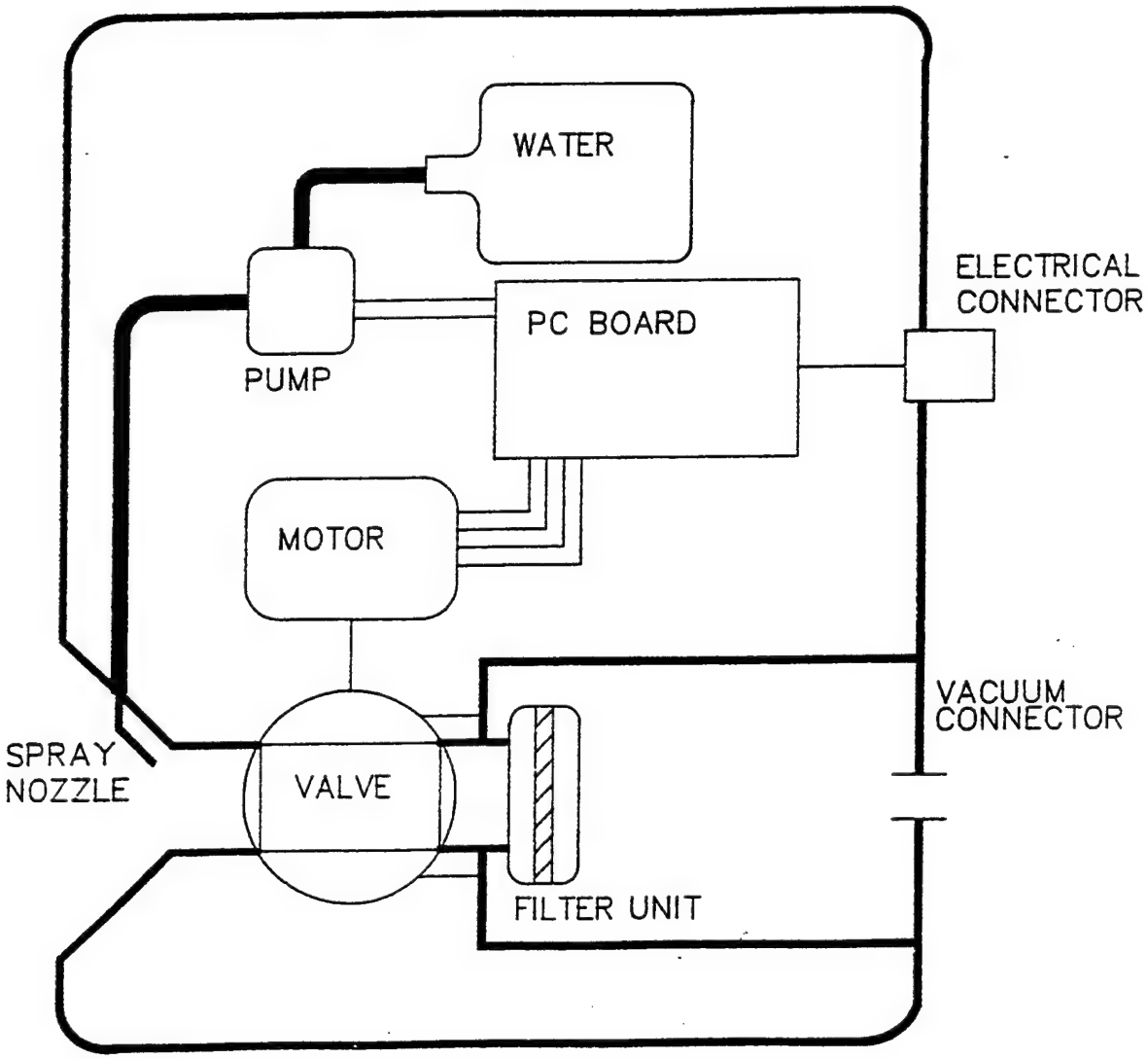

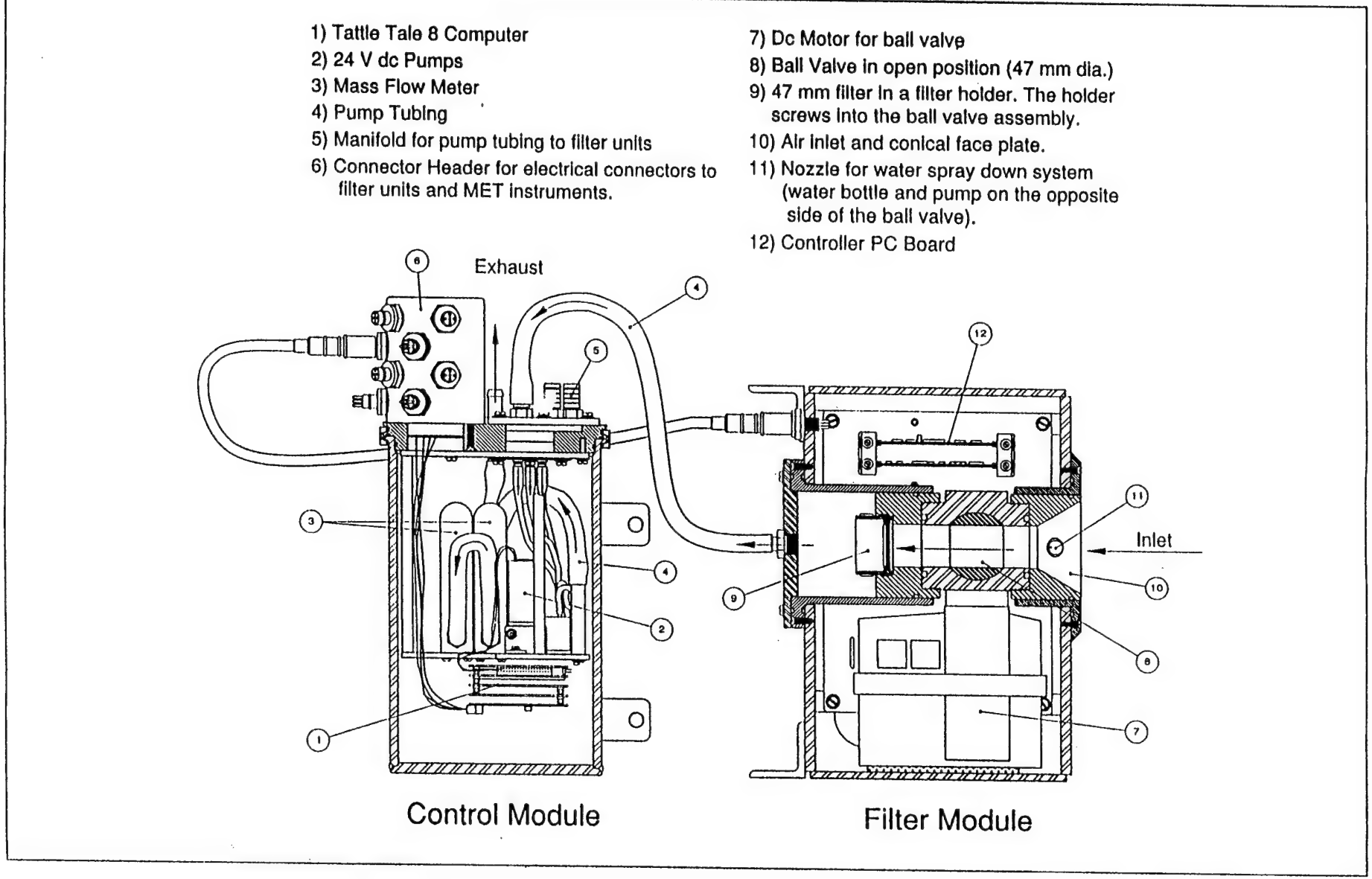


Figure 3. Schematic and Main Components of Control Module and Filter Module

testing at Bermuda and in three months of testing on the buoy. The original pumps and flow meters were never replaced during the duration of the tower and buoy tests. fig. 1. There was a build up brush carbon in the motor area indicating that motors should be replaced at least once a year. Brushless motors would eliminate the problem.

The five individual filter modules are connected to the pumps through a manifold (Figure 1). While we opted for five filter modules, more can be added by increasing the number of ports on the pump manifold in the control module. One control module can service from 1 to 20 filter modules. Hence, the time-series capabilities of this sampler can be increased easily and not too expensively.

Each filter module consists of a motorized ball valve, an aerosol filter unit, a vacuum port and a PC board with a local microcontroller (Figure 2) . It also contains a "washdown" unit which consists of a water pump, a water bottle and two spray nozzles (figure 4). A 2 liter water bottle and a water pump are positioned on one side of the ball valve. The two spray nozzles, built into the face of the inlet, direct pumped pulses of water onto the face of the ball valve. Given that some filter modules might sit for weeks or months prior to opening, we wanted to have a means of washing down the face of the ball valves with clean water prior to its opening for sampling. This might reduce contamination due to the buildup of particles on the face of the ball valve. It is difficult to quantitatively assess how well the washdown process works under field conditions. Hence, we don't know if this feature is really necessary.

The ball valve is a key component of the filter module as it protects the filter from contamination before and after the air filtering step. We opted for a high quality ball valve because of its ruggedness, reliability and polypropylene material. As shown in figure 3, the filter module was designed around the ball valve and filter holder. This meant machining a face plate/inlet to fit the front of the ball valve and a sleeve to fit the back of the ball valve. The filter holder screws into this sleeve. These two parts were constructed from Lexan, leading to an all plastic air flow path for the aerosols.

For the air filtering process, we adopted a plumbing system whereby the pumps are connected to all five filter modules without intervening valves (Figures 1 and 3). Only when a ball valve opens in one of the filter modules does the collection of aerosols begin for that particular module. The ball valves seal so well that no air is pulled through the other four closed filter modules. In practice, the computer opens the ball valve of module #1 and pumping and filtering commences. After a predetermined period of time, the pumping stops and ball valve #1 closes. This sequence of steps is then continued for filter modules #2 through #5. (If all the ball valves are closed, then pumping would pull a vacuum on all five filter modules.) With this arrangement of plumbing and controlling, complicated valving is not needed on the pump manifold to sequentially direct the flow of air through each of the five filter

1) 2 l rectangular plastic bottle for water
2) Water pump
3) Feed tube for water to pump
4) Outlet tube for water from pump,
   Connects to spray nozzles.

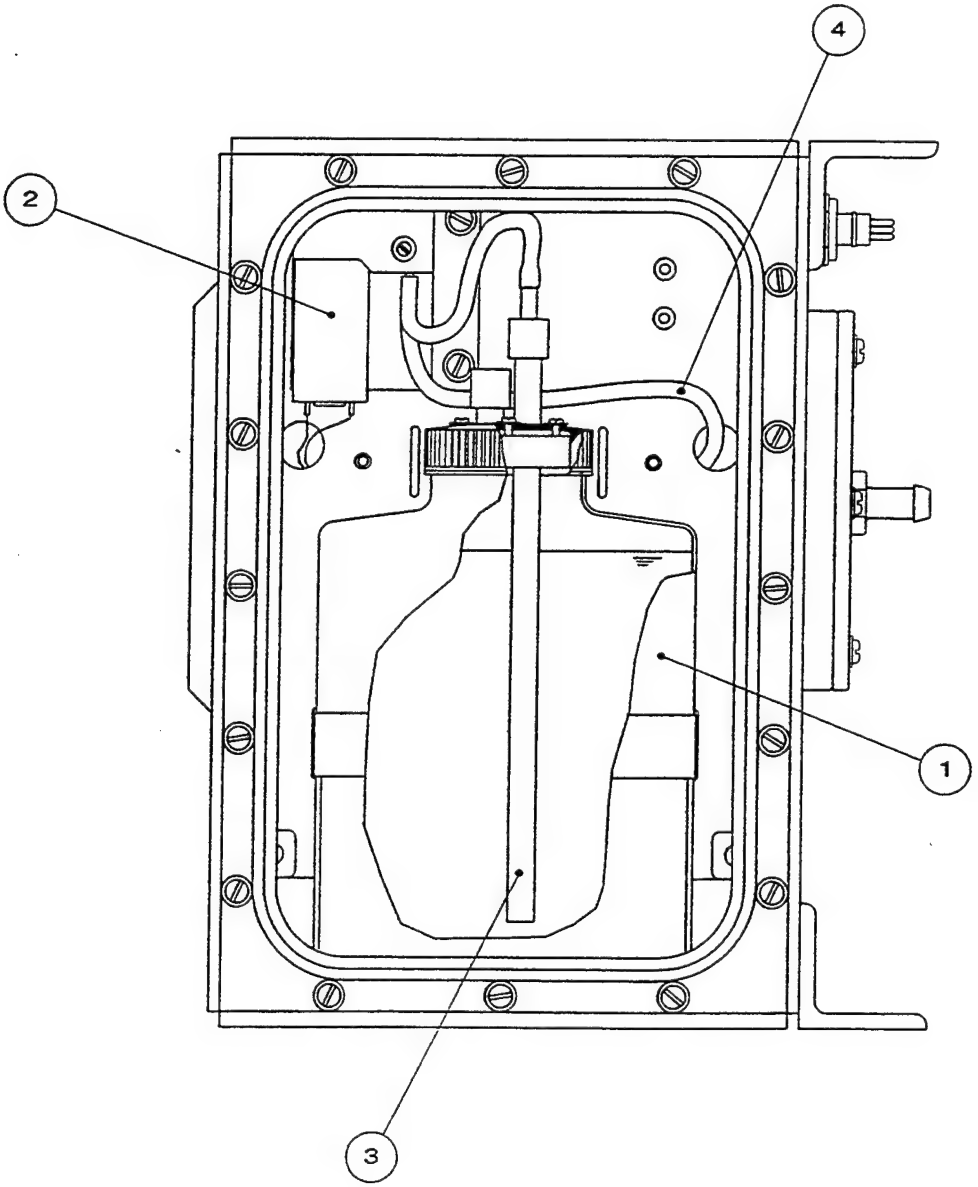


**Figure 4. Schematic and Main Components of Wash Down Unit**

modules. As mentioned above, this type of air handling system means that more filter modules can be added without additional pumps or valves. All that is needed is a manifold with more ports and a modification of the software program.

The filter holders themselves are commercially available from Poretics Corp. [47 mm polypropylene aerosol holder, # 91275]. They come with a narrow (1/8" id) nozzle at the back. To reduce the air flow friction, we opened up the whole back side of the holder by cutting out the nozzle and its support plate. In this way, air has a straight flow path through the 47 mm filter (4 mm rim and 39 mm diameter for the actual filtering area). Another useful design feature is that the Poretic holders screw into the back of the ball valve. This is accomplished by machining a plastic sleeve that screws onto the back of the ball valve (figure 2). This design feature enables filter holders to be loaded into the filter modules without touching the filters themselves. Filters can be preloaded in the filter holders in the laboratory leading to minimal handling in the field. During the Bermuda test, replacing all the filters required opening the plates covering the vacuum ports (Photograph 2), and unscrewing the five used filter holders and replacing them with new pre-loaded ones and replacing the plates. This was a 15 minute job.

Inlet design is a major factor in the performance of aerosol samplers. Given that our sampler will be used under low and high wind speeds and on a rocking and rolling platform, there is probably no "right" inlet design. We have opted for a simple funnel/tube design (figures 2 and 3 and photograph 2). We have kept the diameter (38 mm/1.5") of the airflow path uniform from the inlet through the filter. We have also kept the distance from the inlet to the filter as short as possible (4"). To accommodate a more complicated type of inlet, we have designed the sampler so this could be done relatively easily. One could also add an impactor stage to remove larger particles before they reach the filter. While we have deployed the sampler with the inlets into the wind, the filter modules will also operate facing upward. Hence, the option exists to collect aerosols from filter modules facing in different directions, if comparisons of that type are needed.

The PC boards in each of the filter modules receive commands from the computer in the control module to open and close the ball valve and to commence a washdown of the ball valve face. Having a PC board with a microcontroller in each filter module means that only one four-wire electrical connector for power and communications is needed per filter module.

In summary, the design results in a fairly small package for mounting on a land tower or a buoy. We have stressed simplicity and flexibility in the hardware and software. Each filter module weighs about 30 lb. as does the control module. For each filter module, there is only one electrical and one vacuum connector to the control module. Likewise, each meteorological sensor is connected to the control module by one electrical connector. The system incorporates three pumps and two

flow meters as backups, and the filter units can be changed quickly and cleanly. Being of modular design, more filter modules can be added without adding a new control module. Likewise, inlets of different designs could be built and added to the face plate. The size and weight of the filter modules could be reduced significantly (i.e., by 25%) by a combination of (1) using plastic housings or housings with thinner Al walls, (2) using one housing to hold two filter units and (3) eliminating the washdown unit. Lastly, the air filtering rate of the system could be significantly increased if more powerful pumps were substituted. This last change would be most useful on towers where AC power is available. The choice of flow rate is dependent on the power available, sampling duration per sample and the number of samples required for each time-series measurements.

**b. Meteorological Sensors and Data Transmission**

A R. M. Young Wind Monitor (Model 05103) was used to measure wind speed and direction. This unit uses a propeller that measures 0.27 meters of wind per revolution via a rotor magnet and coil that is coupled with electronics (Model 05603) to produce an analog voltage proportional to wind speed. The vane of the wind monitor is coupled to a potentiometer that measures the direction relative to the front of the buoy. Since the vane on the buoy mostly keeps the buoy into the wind, the wind direction is a record of the short term direction relative to the buoy. The analog voltage of speed and direction is used by the controller to control the sampling logic.

A R. M. Young Precipitation Sensor (Model 050202) was used to measure the amount of rainfall over various periods. The sensor is a self-siphoning gauge that measures millimeters of rain. After reaching a total of 50 millimeters, the unit siphons back to a zero millimeter output for a repeat of the operation. The output of the sensor is an analog voltage proportional to millimeters of rain. This is recorded by the controller as part of the supporting information.

A WHOI built rain detector was fabricated using parts of a design from Tom Snowdon (Miami University) who provided a stainless steel grid and plate. These were assembled on a black delrin box that also housed the electronics. The electronics are based on a fluid level detector chip (LM1830 /National Semiconductor) that supplies an ac voltage to the grid and detects a change in the leakage impedance. The ac voltage is used to prevent electrolytic corrosion. The unit requires 18 - 30 vdc supply voltage and outputs a 5 vdc logic that is high when water is on the grid. The units used by the University of Miami have an internal heater so that water can be evaporated as soon as possible after the rain has stopped. For use on a buoy, a heater is not feasible because of the power requirements. The unit used took about 1 hour to recover after water was splashed on the grid. This was tested several times during the buoy deployment offshore of WHOI. Considering the normal sample times of perhaps 2 days, the one hour recovery time seems reasonable for buoy use. Mechanical drawings of the grid plates and mounting box and a schematic of the circuit can be found in the Appendix.

On the buoy a wireless r.f. modem operating at 900 megahertz was used to communicate from nearby buildings. The units used were from Wireless Scientific Co. The model CK485AW unit was used on the buoy and was in an all weather housing and communicated with the controller in RS485. The unit was powered with 12 vdc supplied by batteries in the buoy well. The model CK232 unit was used in the buildings and was in a standard electronics package and communicated with the PC computer in RS232. The unit was powered with a120 vac adapter. A yagi antenna was used on the CK232 unit in the building for better reception.

### c. Minimizing Contamination for Trace Constituents of Aerosols

Collecting cleanly for trace metals and/or trace organic compounds must be a key consideration in the design of any aerosol sampler. The sampler was designed to collect cleanly for trace levels of major (seasalt) and minor (trace metals such as Fe) inorganic elements. The internal components of our sampler - those parts exposed to the air - are constructed out of plastics in order to minimize contamination for trace metals. The inlet, inserted into the front of housing with Ti bolts, is made of Lexan (polycarbonate). The ball and inside of ball valve is made of polypropylene. The sleeve joining the filter holder to the ball valve is Lexan and the Poretics filter holder itself is polypropylene. It may be impossible to select construction material that is clean for both inorganic elements and trace levels of organic compounds. The air path could be constructed out of metal (e.g. Al, Ti) if organic chemists determined that all types of plastics were unsuitable for their samples. The external housings of the filter modules are constructed from aluminum which was then anodized and coated with a metal-free paint. Here again, housings could be constructed out of strong plastics. In summary, the filtering units could be constructed from metals and/or plastics to satisfy the sampling criteria of inorganic and organic chemists.

### d. Rate of Air Filtering and Sample Size

The WHOI instrument is designed to be a low volume air sampler. We aimed and achieved a flow rate of 10-17 lpm (14-24 $m^3$/day). This rate can be easily obtained and maintained by using a variety of filter types and three small 24 VDC pumps. As shown in the table 1, the flow rate of our sampler is about 100 times slower than that employed by typical high-volume aerosol samplers. Our filtering area is about 35 times smaller than that of Hi-Vol. samplers.

**Table 1: Flow Rate Comparison**

Hi Volume Sampler: 1.41 $m^3$/min. and 415 $cm^2$ filter area
(18 x 23 cm filter dimensions; total filter is 20 x 25 cm))

WHOI Low Volume: 0.015 $m^3$/min. (22 $m^3$/day; 15 lpm) and 12 $cm^2$ filter area (diameter of filtering area is 39 mm; total diameter is 47 mm)

For buoy deployment, one must balance power available from batteries, the power consumption of the air pumps, the number of time-series samples required and the volume of filtered air required for each sample. Our system is designed so the investigator can change these key parameters. Our long-term objective is to produce a 10-20 place time-series sampler that can operate for 2-4 months and collect at least 50 μg of dust per sample. We are aiming for a sampler where a single filter that can collect continuously for a few hours or integrate over many tens of days or collect aerosols for any time frame in between. Again flexibility is the theme.

The rate of filtering (12-15 lpm) for our prototype was chosen in order to collect about 50 μg of dust from open ocean sites over a period of a few hours to a few weeks. Fifty μg of dust would provide sufficient material for inorganic analysis by modern analytical methods. The annual mean concentration of dust at Bermuda is 1 $\mu g/m^3$, with the yearly range of 0.01 to 10 $\mu g/m^3$ (Arimoto et al., 1992). The lower valve refers to the winter period while the high value refers to summertime pulses of dust from Africa. To collect 50 μg of dust over this 100 fold range of concentration, 5 to 500 $m^3$ of air would need to be filtered. At a flow rate of 15 lpm (22 $m^3$/day), this volume translates into a collection time ranging from 6 hours to 23 days. "Dusty" conditions will only require a few hours of filtering to reach the 50 μg level.

**e. Filter Types and Flow Rates**

A laboratory-based experiment was carried out to compare the flow rate of air through different types of filters. We used 47 mm diameter filters mounted in a *Poretics Inc.* filter holder and one 24 VDC pump. The filter holder and pump are identical to those employed in the control module. The material of the filters ranged from paper (Whatman #41 - #541), borosilicate glass, quartz, Teflon to polyvinylidene fluoride (Durapore by Millipore). The nominal pore sizes ranged from 0.45 μm to 25 μm.

The results are presented in table 2. The most prominent and unexpected observation is that the flow rates didn't substantially vary with the type of filter. The only filter that showed a substantial decrease was the 0.22 μm Durapore filter (4.8 vs. 6 lpm for all the others). Surprisingly, even the 0.45 μm Durapore filter had a rate of about 5.6 lpm; Whatman #41, for comparison, had a value of 6 lpm.

Whatman #41 filters are used in the AEROCE project as they combine good flow rates and acceptable blanks for metal analysis by INAA (Instrumental Neutron Activation Analysis; Arimoto et al., 1992). Our results show that the buoy-deployed pumps are capable of collecting aerosols using filters which have both a significantly smaller pore size and lower blanks for trace metals (Durapore vs. Whatman #41). Collecting smaller particles on cleaner filter material will be a great advantage to many studies where buoy-mounted aerosol samplers are used.

## Flow Rates of Different Types of Filters

| Filter Number | Filter Type | Retention (> um) | Description | Flow Rate lpm |
|---|---|---|---|---|
| 0 | No filter | 0 | | 6 |
| 0.5 | No filter (2) | 0 | | 5.9 |
| 1 | Whatman #41 | 20 | standard | 5.94 |
| | Whatman #41 (2) | 20 | standard | 5.81 |
| 2 | Whatman #50 | 2.7 | low ash | 5 |
| 3 | Whatman #52 | 7 | " | 5.83 |
| 4 | Whatman #54 | 25 | " | 5.96 |
| 5 | Whatman #540 | 8 | ashless | 5.78 |
| 6 | Whatman #541 | 25 | " | 6 |
| 7 | Whatman EPM 2000 | 0.3 | pure Borosilicate glass | 5.88 |
| 8 | Pallflex | 10 | quartz | 5.97 |
| 9 | 5 um Durapore | 5 | | 5.9 |
| 9.5 | 5 um Durapore (2) | 5 | | 5.79 |
| 10 | .45 um Durapore | 0.45 | | 5.72 |
| 10.5 | .45 um Durapore (2) | 0.45 | | 5.57 |
| 11 | .22 um Durapore | 0.22 | | 4.94 |
| 11.5 | .22 um Durapore (2) | 0.22 | | 4.71 |
| 12 | Teflon | 10 | hydrophobic | 5.76 |
| 13 | Whattman QM-A (2) | 10 | pure SiO2 quartz | 5.8 |
| 14 | Gelman (2) | | | 5.84 |

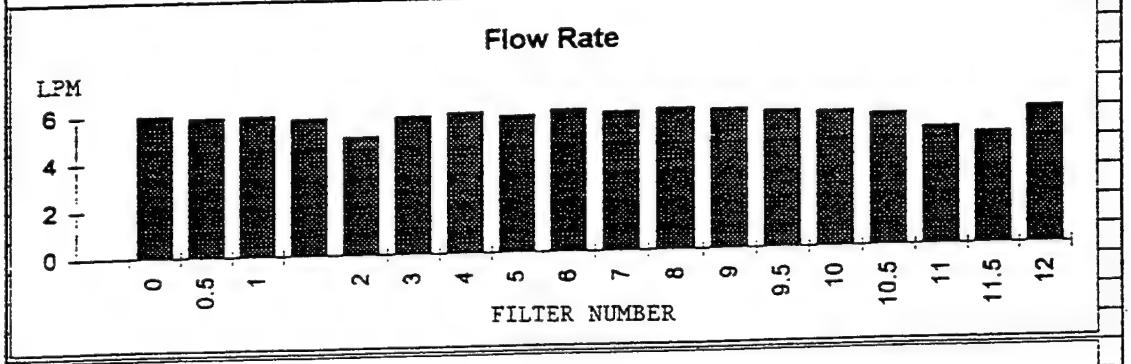


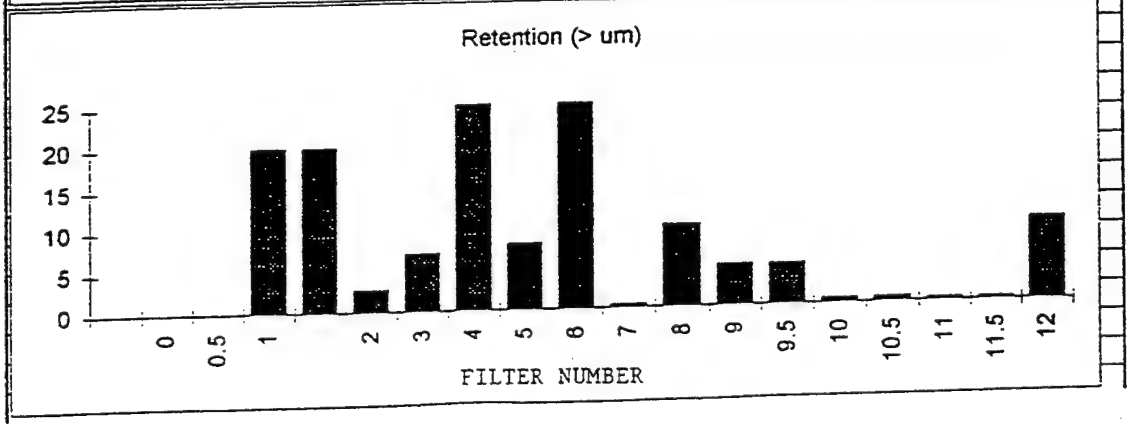


Table 2

The laboratory tests didn't take into consideration that the buoy-deployed filters could be clogged by the build up of ambient particles. Clogging could significantly reduce flow rates and add a burden to the pumps' motors. However, as will be reported in a later section, sea tests were carried out on a buoy. These runs employed 0.45 μm Durapore filters and showed that the flow rate through one filter decreased from 15 to 10 lpm over the course of 5 days. This decrease of 30% is attributed to clogging by seasalt and soot particles, the two dominant forms of aerosols at our site. In spite of this reduction, we consider a flow rate of 10 lpm through 0.45 μm Durapore filters to be more than satisfactory for providing a good aerosol sample. This five day test, coming after 4 months of sampling from the Bermuda tower and 3 months of sampling from the buoy, didn't appear to be detrimental to the pumps. The same three pumps were used, without any modifications, for 7 months of testing. They kept running and running and running.

## VII. Tower Test on Bermuda

### a. Physical Set-Up and Sampling Protocol

The aerosol sampler was given its first field test on the AEROCE (*Atmosphere/Ocean Chemistry Experiment*) tower in Bermuda. The sampler was mounted on top of this 22 m tower (about 40 m above sea level) at the end of July 1996 and removed in early December 1996. During this four month period, the sampler ran perfectly in that there were no mechanical or electrical failures. The external white paint finish of the filter modules showed no wear and tear. There was no visible sign of particle buildup around the inlets. We did discovered one programming error (easily corrected) in the operating software.

Photograph 4 shows the five filters modules perched on the right wing of the AEROCE tower. The three AEROCE Hi-Vol aerosol samplers can seen in the middle of the tower (to the left of our sampler). Both types of samplers face out to sea. Photograph 5 contains four closer views of the sampler mounted on the tower. We fabricated our own Al brackets which hold the five filter modules to the Al tower rails. We also attached white plastic sunshields above the filter modules help cool them in the summer's heat. Once hauled to the top, it took two people fours hours to mount the whole system in place. Only two hours was required to dismantle and lower all the components to the ground.

AC Power from the AEROCE tower was supplied to a junction box. Components and a diagram of the junction box be found in the Appendix. The junction box provides 24 vdc main power, 24 vdc backup power and a sector switch contact closure for in-sector sampling control. The main 24 vdc is converted from the tower's 120 vac using a fixed voltage power supply. The back-up 24 vdc is provided from two sets of two 12 vdc batteries in series. The 120 vac supply , used

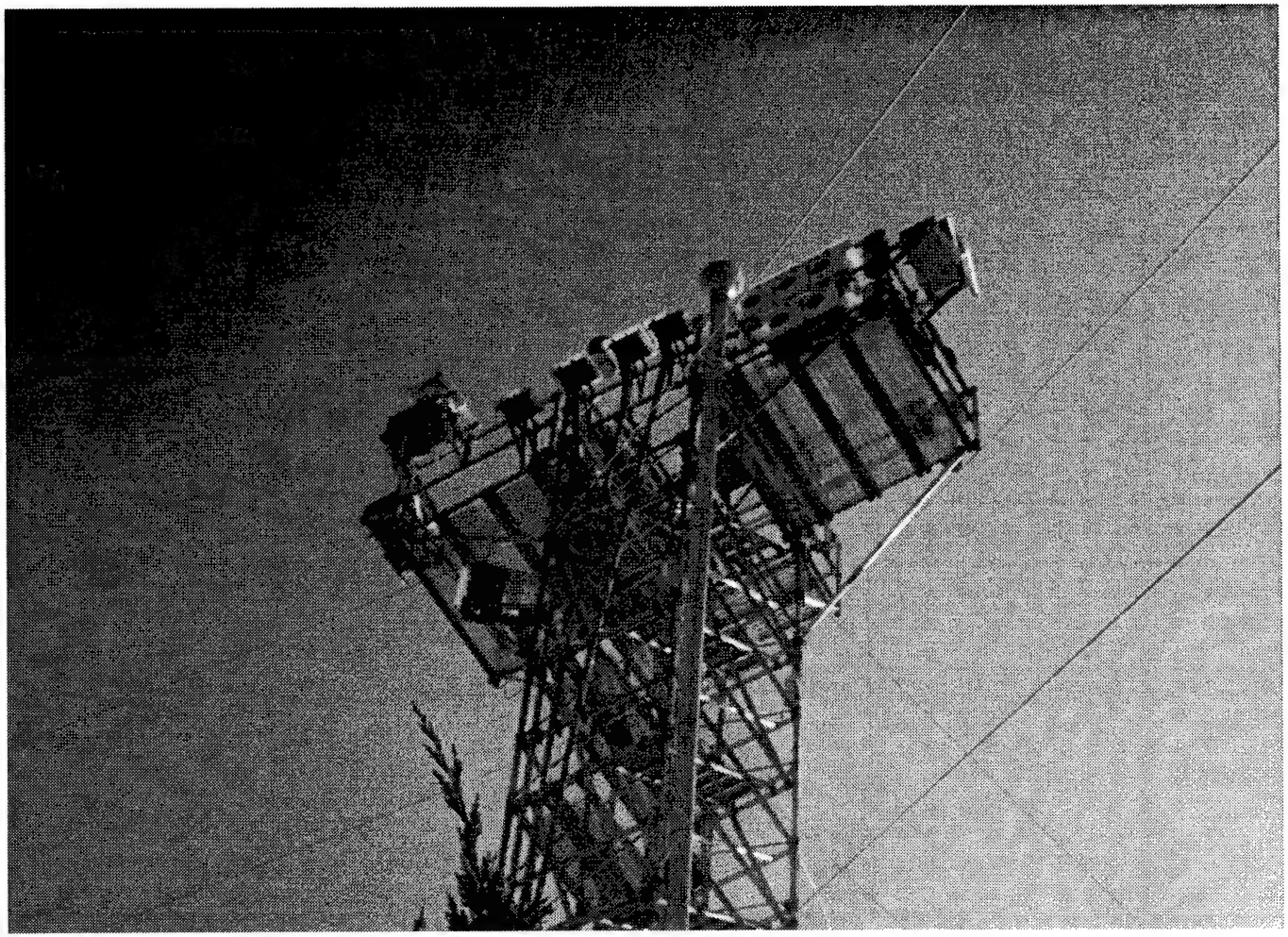

Photograph 4. Bermuda tower (22 m) looking from the direction of the Atlantic Ocean. The WHOI aerosol sampler is positioned on the right wing where the five filter modules (in a three/two stack) can be seen mounted on the railing to right on the large plastic pipe. Three high volume AEROCE aerosol samplers are mounted in the center with large vacuum pipes connected to pumps at the base of the tower.

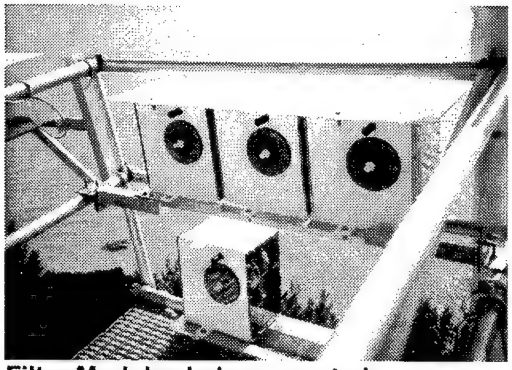

Filter Modules being mounted on tower

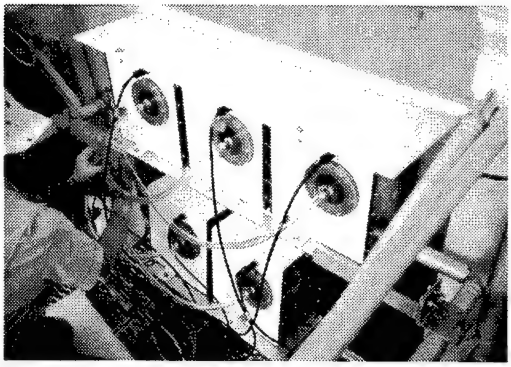

Back view of five filter modules. Note electrical wires and vacuum tubes leading to the Control Module on the deck (behind D. Hosom's arm)

Front view of the five Filter Modules.Inlets face toward ocean

Filter Module plus precipitation gauge (black rimmed cylinder), rain sensor (on rail over gray box), and AEROCE bucket rain collector. Wind speed/ direction instrument out of view

## W.H.O.I. Buoy Aerosol Instrument Bermuda Tower

Photograph 5. A collage with four views of the WHOI aerosol sampler mounted on the Bermuda tower in August 1996.

to the power the AEROCE tower, is only on when the wind is in-sector and > 1 m/sec and when it is not raining. During sampling conditions, the 120 vac causes an ac relay to close. The backup battery power in the JB keeps the computer in a standby mode when the tower's AC power is off. On a buoy batteries would be used to power all aspects of the sampler.

Both the WHOI and AEROCE samplers were connected to the tower's in-sector switch. *In-sector* refers to a condition when the winds are blowing from the ocean to the tower at speeds greater than 1 m/sec. In-sector is set to 180-330 degrees at the Bermuda tower. *Out-of-sector* refers to times when the winds are blowing over the island to the tower. Filtering also shuts down when its rains and when the wind speed, from any direction, is below 1 m/sec. Hence, aerosols were only collected under periods of in-sector conditions and no rain. Throughout the four month test, the WHOI sampler responded as designed to changing meteorological conditions. That is, air filtering stopped during periods of rain and out-of-sector wind conditions.

A communications cable connected the control module on the tower to a computer in the van at the base of the tower. By calling up a program, the site operator at the tower could determine the progress of the time-series sampling and could modify some of the sampling protocols. For example, during the Bermuda deployment the site operator reduced the sampling time from 100 hr. per sample to 50 hr. per sample.

Over the four month deployment on the Bermuda tower, the five-place sampler was changed twice for a total of ten filters. For the first sampling period (filters #1-5) each sample was set to collect for 100 hr. (4.2 days) of in-sector time; this was reduced to 50 hr. (2.1 days) for the second sampling period (samples #6-10). The first and second sampling periods were, on average, in-sector only 33% and 26% of the time. This means that the sampler was filtering only 1/3 to 1/4 of the time. The range of % in-sector time for the ten samples was large, 12 to 79%.

### b. Comparison of WHOI and AEROCE Aerosol Samplers

One objective in deploying the sampler on the Bermuda tower was to carry out a side-by-side comparison with more traditional Hi-Volume aerosol samplers used by atmospheric scientists. Both samplers were located about 2 meters from each other and used the same type of filters (Whatman #41). Importantly, both samplers were connected to the tower's in-sector switch so they collected aerosol over the same periods of time.

The total iron (Fe) concentration was chosen for comparative purposes. It is important to note that the two types of collectors operate at different time and volume scales. The filtration rate of the AEROCE sampler is approximately 100

times that of the WHOI sampler. Moreover, the AEROCE filter (20 x 25 cm) is much larger than the 47 mm diameter filter used in the WHOI sampler. In practice, a single AEROCE Hi-Vol. filter represents about 6-12 hr. of rapid filtering while a single WHOI Low-Vol. filter was in place for 4 to 17 days. To carry out a valid comparison, all the AEROCE samples, corresponding to one specific WHOI sample, were analyzed and the volume averaged Fe concentrations calculated. In practice, 3-5 AEROCE filters were used for each WHOI filter. Small pieces of AEROCE and WHOI filters were cut, weighed, digested in strong acid (mixture of HF, HCl and $HNO_3$) at room temperature for 2 days and analyzed for dissolved Fe by the ferrozine colorimetric method. With respect to a single AEROCE sample, the small analyzed piece represents only 1/80 of the total filter area. With respect to the 47 mm WHOI filters, about 1/8 of total area was analyzed for Fe.

The ten WHOI samples, covering the four month time-series, show that the total Fe concentration ranges from 0.02 to 0.62 μg Fe/m$^3$ (figure 5). This 30-fold range between August and November agrees well with published data from AEROCE Bermuda samples of previous years (Arimoto et al., 1992). Both the WHOI and AEROCE samplers picked up the large pulse of particulate Fe in early October; this aerosol's reddish brown color indicates an African origin. The low Fe levels in the late October and November samples reflect the start of winter time levels.

The results of a direct comparison between three WHOI filters and the corresponding AEROCE samples are summarized in figure 5. The Fe concentrations span a 15-fold range from 0.04 to 0.6 μg Fe/m$^3$. The Fe concentrations compare reasonably well, that is 10-15 % around the average Fe concentrations of the WHOI and AEROCE samples. This agreement is more remarkable when considering that the comparison is between a single WHOI filter from a low-volume long-term sampler and a composite of 3-5 AEROCE filters from a hi-volume short-term sampler.

In summary, the excellent mechanical/electrical performance of the sampler and the good agreement between the WHOI and AEROCE total Fe concentrations demonstrated that the WHOI autonomous aerosol sampler was operationally sound and ready for testing on a buoy.

## VIII. Sea Tests on a Buoy

### a. Overview

The aerosol sampler was mounted 3 meter above sea level on a 3-m diameter discus buoy and interfaced with a rain detector, a rain gauge, an anemometer and a r.f. modem (Photograph 6). Power was supplied by ten battery packs, each of which contained 70 alkaline D-cells. The buoy was moored in Vineyard Sound (off Woods Hole, MA) on 19 May 1997 and retrieved on 22 August 1997. The buoy was towed

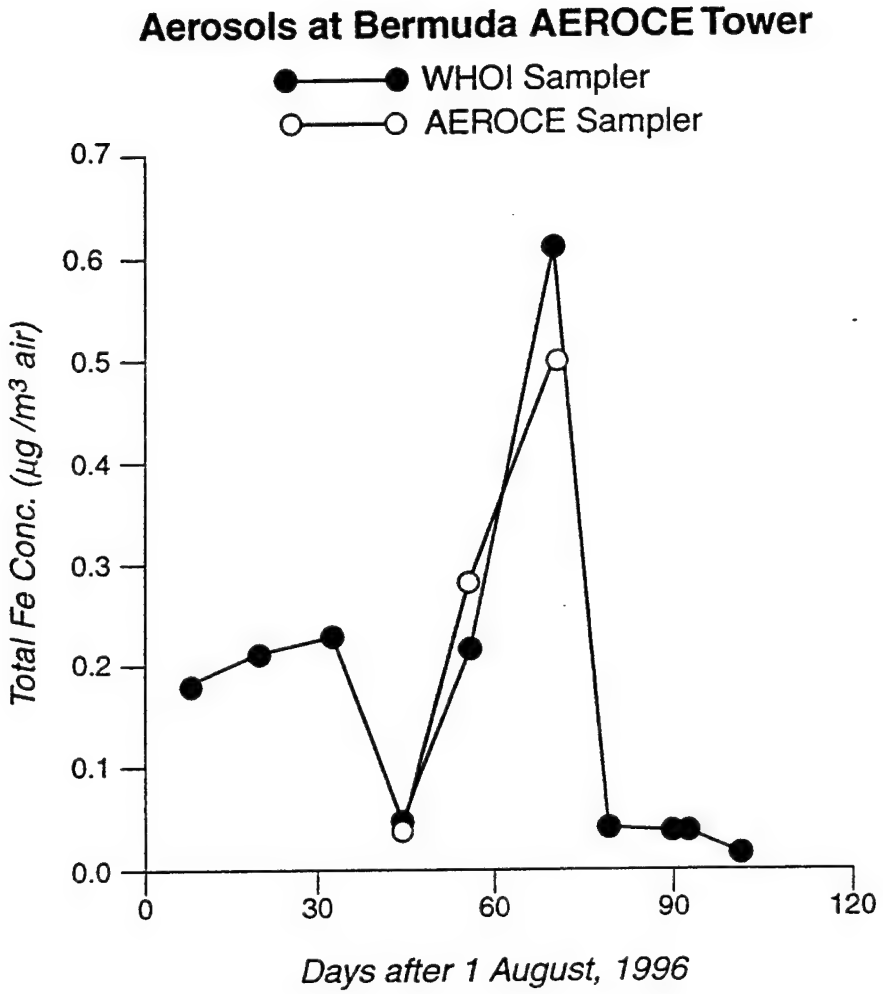


Figure 5. Comparison of WHOI and AEROCE Aerosol Samplers: Total Fe Concentrations of Aerosols at Bermuda between August and November 1996

**Photograph 6**

A collage with four views of the WHOI aerosol sampler mounted on a 3 m discus buoy in Vineyard Sound in the summer of 1997. Top left - front view showing five filter modules mounted across the tower at a height of 3 m above the ocean. Top right - side view showing filter modules, anemometer, rain gauge (tall white cylinder) and rain detector (in gray bucket). Also shown are the modem (on pedestal above vane) and the vane to keep the buoy facing into the wind. Bottom left - back/side view showing vacuum lines and electrical cables connecting five filter modules and meteorological sensors and modem.

On the deck of buoy in the top left figure is a fiber optics $pCO_2$ sensor system developed in the laboratory of David R. Walt at Tufts University; the sensor is submerged about 1 m below the ocean surface.

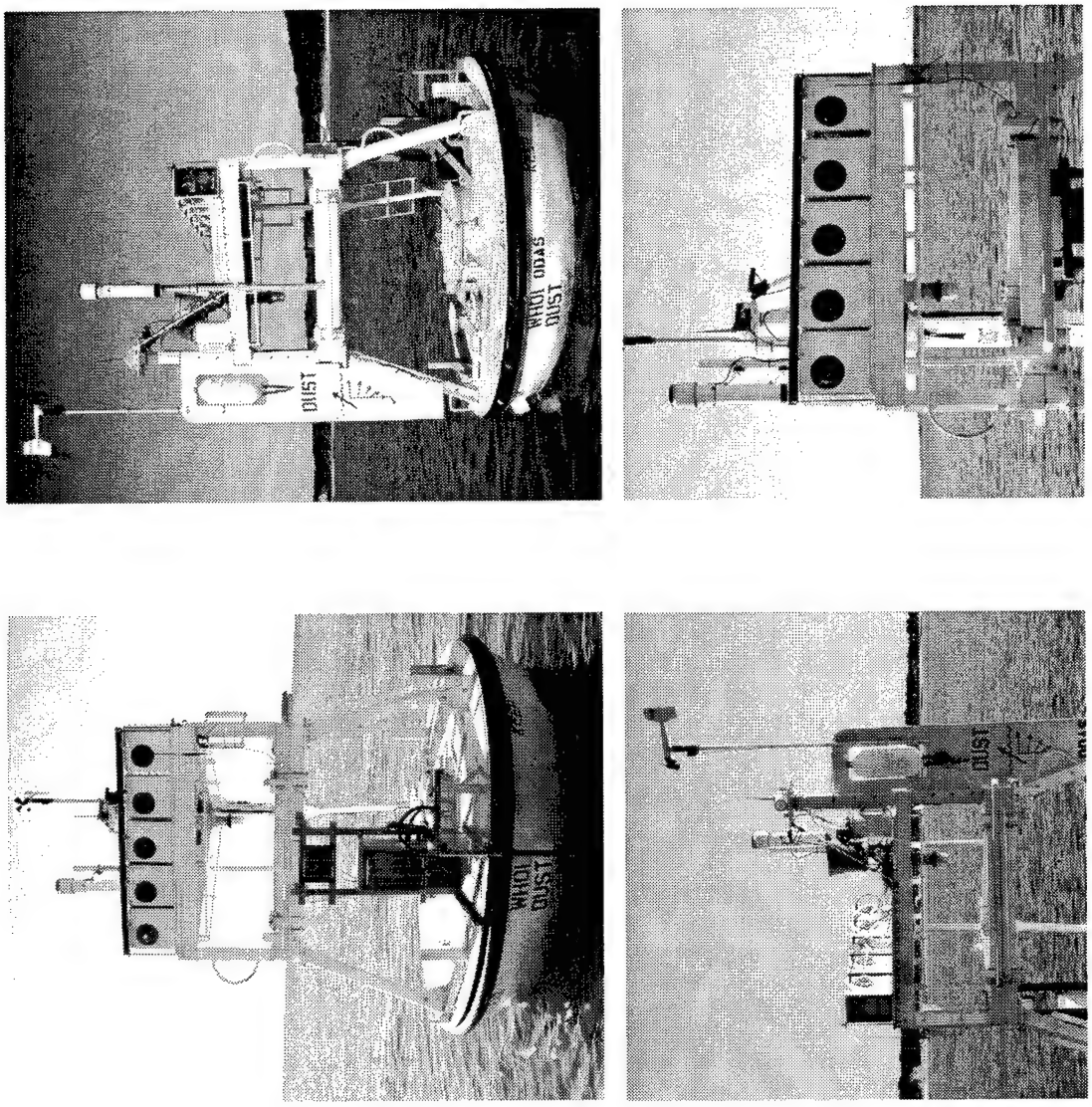


Photograph 6.

to position and returned to Woods Hole by a small vessel. The buoy was moored in 15 feet of water about 500 m offshore and within line-of-sight of the Institution's Clark Laboratory. We used the top floor of the Clark Laboratory to set up the other half of the r.f. modem system. In that configuration we were able to communicate with the buoy instrument and maintain a visual surveillance.

While the buoy test took place in relatively calm coastal waters, we did encounter a few days of strong wind speeds (10-17 m/s), moderate waves (2-4 feet) and heavy rainstorms. As discussed in a later section, a large coastal storm overturned the buoy on 21 August, four days before its rescheduled retrieval.

The modem allowed us to download data from the three meteorological instruments and to set certain sampling parameters. With respect to the latter, we could set the duration of time over which the five filter modules collected aerosols and set the wind speed range for sampling. The rain detector could also be activated or deactivated. With the addition of a compass (not used on this test), one could set the wind direction range over which aerosol sampling occurred.

A suite of sampling protocols was carried out during the 3 months of sea testing. All the mechanical, electrical and computer control systems worked flawlessly. Specifically, the five filter modules sequentially cycled through pre-set periods of time with sampling halted during rain events and under different wind speed sectoring. Filters with pore sizes ranging from 25 to 0.45 μm worked well with the latter causing a reduction of air flow from 15 to 10 lpm -see section VI-e. High humidity and seasalt didn't affect the rain detector nor did seasalt aerosol clog the filters. The aerosols collected between May and August 1997 were predominantly combustion products as deduced from their gray color, low content of iron and seasalt cations and anions, and $SO_4$/Cl ratios much higher than local seawater. The dominance of combustion products is consistent with many hazy summer days. The sampler was programmed to filter during the local Forth of July fireworks display from a nearby barge; a large plug of dark gray aerosols indicated that this event was captured.

### b. Meteorological Data and Their Interface to the Aerosol Sampler

This section provides three examples of the meteorological data retrieved from the buoy via the modem and shows how these data were used to control the filtering protocol of the aerosol sampler. As discussed in the previous section, one unique feature of the buoy-mounted system is its ability to sense meteorological conditions and use this information to turn the aerosol sampling on and off. Aerosol sampling immediately shuts down when the rain detector senses rain drops and commences when the rain drops evaporate from the sensor. With respect to wind speed, sampling can be programmed via the modem to occur over a pre-set range of wind speeds (e.g., 5-20 m/s). This is referred to as *wind sectoring*. In the sea tests,

the 180 degree directional value of the anemometer was set to line up with the wind vane on the back of the buoy. Hence, a wind direction of 180 degree refers to wind blowing toward the front of the buoy where inlets of the aerosol sampler are situated (Photograph 6).

Figure 6 (file r4s3g1b) shows time-series of data for wind speed, wind direction, rain detector signal and pump current. The rain detector signal of 4, indicates that there was no rain over this nine hour record. The wind sector was set at 3 to 6 m/s (6.6 to 13.2 mph). The upper panel shows that the wind speed slowly cycled in and out of sector. For example, the winds are less than 3 m/s in the 60-62 hr. period and greater than 6 m/s in the 63.5-64.3 hr. period. During these two periods of out-of-sector conditions, the pump current drops to zero indicating that the aerosol sampler shut down. Periods of in-sector winds coincide with a pump current of 500 as air filtering proceeds. Wind direction data will be discussed later in this section.

Figure 7 (file r4s1g1b) is a time-series in which there are rain events and wind in and out of sector (set for 3-6 m/s). The combination of rain and wind conditions lead to the aerosol sampler being mostly off during this 50 hr. period. In the 0-25 hr. period, there was no rain but the winds were mostly out of sector; short periods of in-sector conditions and air filtering occurred between 8-15 hours. Next consider the period from 37 to 48 hr. when no sampling occurred. In the first half of this time slot, the winds were out of sector (6-10 m/s) and it was raining (signal = 0). From 42 to 48 hours, the winds were in-sector but the rain detector indicated that it was raining.

Figure 8 (file r6s2g1) is a 73 hr. time-series record which includes data for the rain gauge and the two flow meters . As the wind sector was set to 0-10 m/s, the winds were never out-of-sector. There was a big rain event at about the 32.5 hour mark as sensed by the detector and gauge. Over the next 2.5 hr. about 8 mm of rain fell. Aerosol sampling, as indicated by the pump current and flow meters, stopped between hours 32.5 and 51. The rain gauge data indicates a slow and small accumulation of rain over that period of time. Aerosol sampling at a flow rate of 14-16 lpm commenced at hour 51 and ended at hour 69.5, with only one 2 hr. rain interruption.

This last example brings up a key point about interpreting the rain detector and gauge data. While the rain detector is very sensitive to the start of a rain event, it does not record when the rain stops. Experiments on the buoy have shown that it takes about 1 to 1.3 hr. for rain water to evaporate from the rain detector. Hence, there is at least a 1 hr. hiatus between the end of a rain event and the start of aerosol sampling. Neither sea spray nor high (> 90% for many days at a time) humidity trigger the rain detector. We have no data on the effect of fog. The rain gauge is

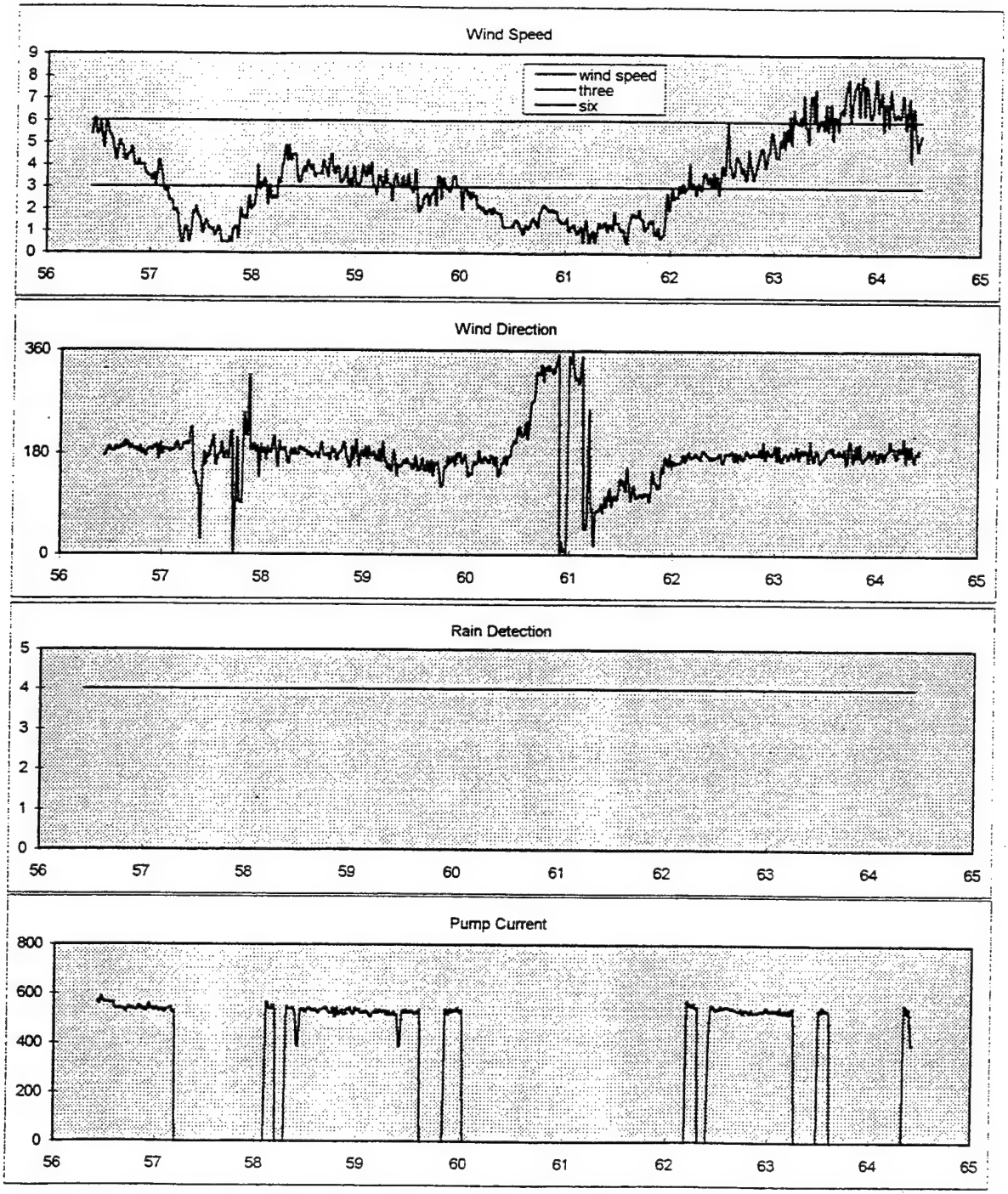


**Figure 6. Example of Data from Buoy-Mounted Aerosol Sampler during Sea Test of the summer of 1997. Time-series includes data for wind speed, wind direction, rain detector, and pump current. Time in hours and wind speed sector set to 3-6 m/s. For rain detector signal, 4= no rain and 0 = rain. File number is r4s3g1b.**

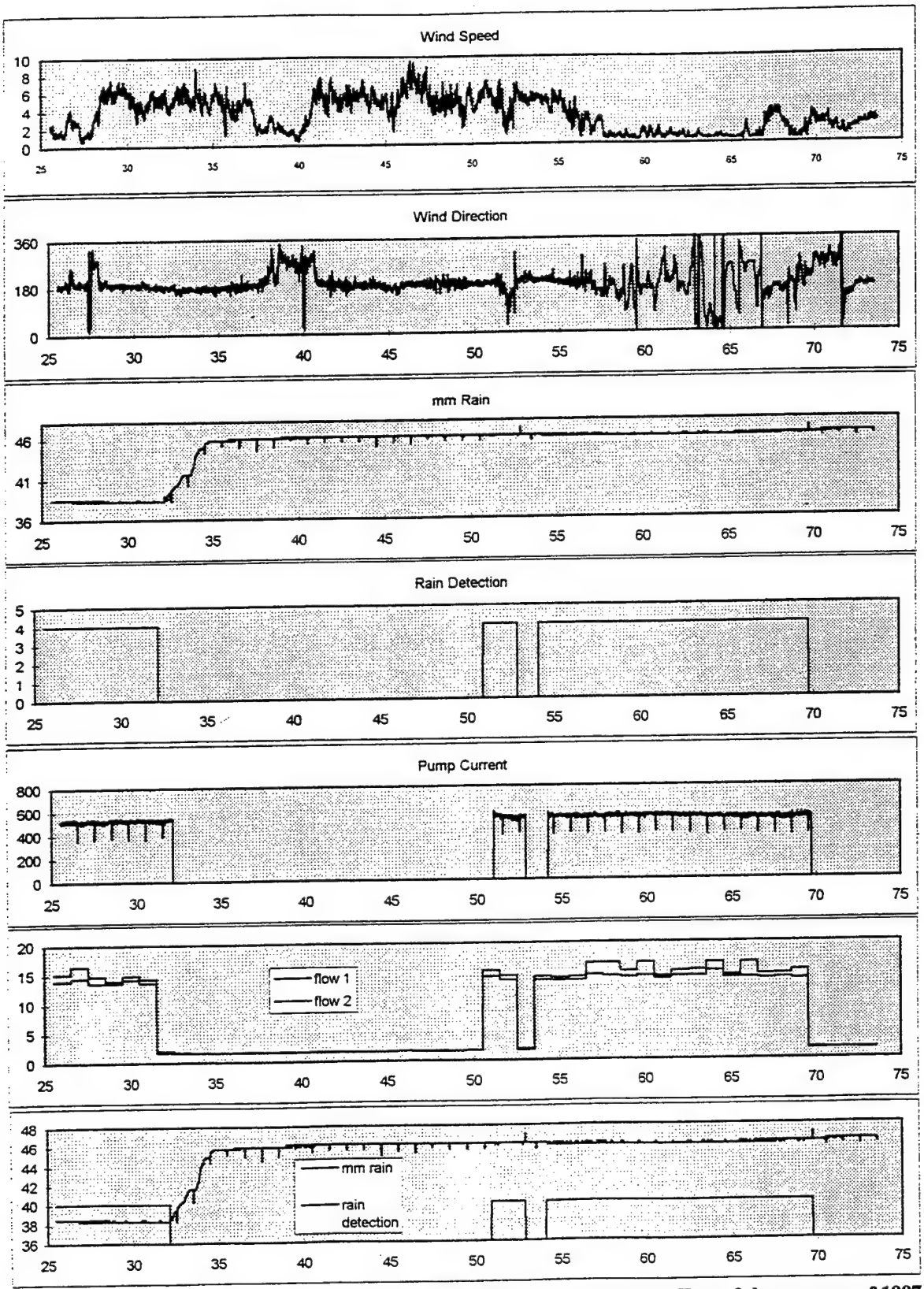


**Figure 7. Example of Data from Buoy-Mounted Aerosol Sampler during Sea Test of the summer of 1997. Time-series includes data for wind speed, wind direction, rain detector, pump current and airflow through the two mass flow meters. Time in hours and airflow in liters per minute. Winds sector set to >10m/s. For rain detector signal, 4= no rain and 0 = rain. File number is r6s2g1.**

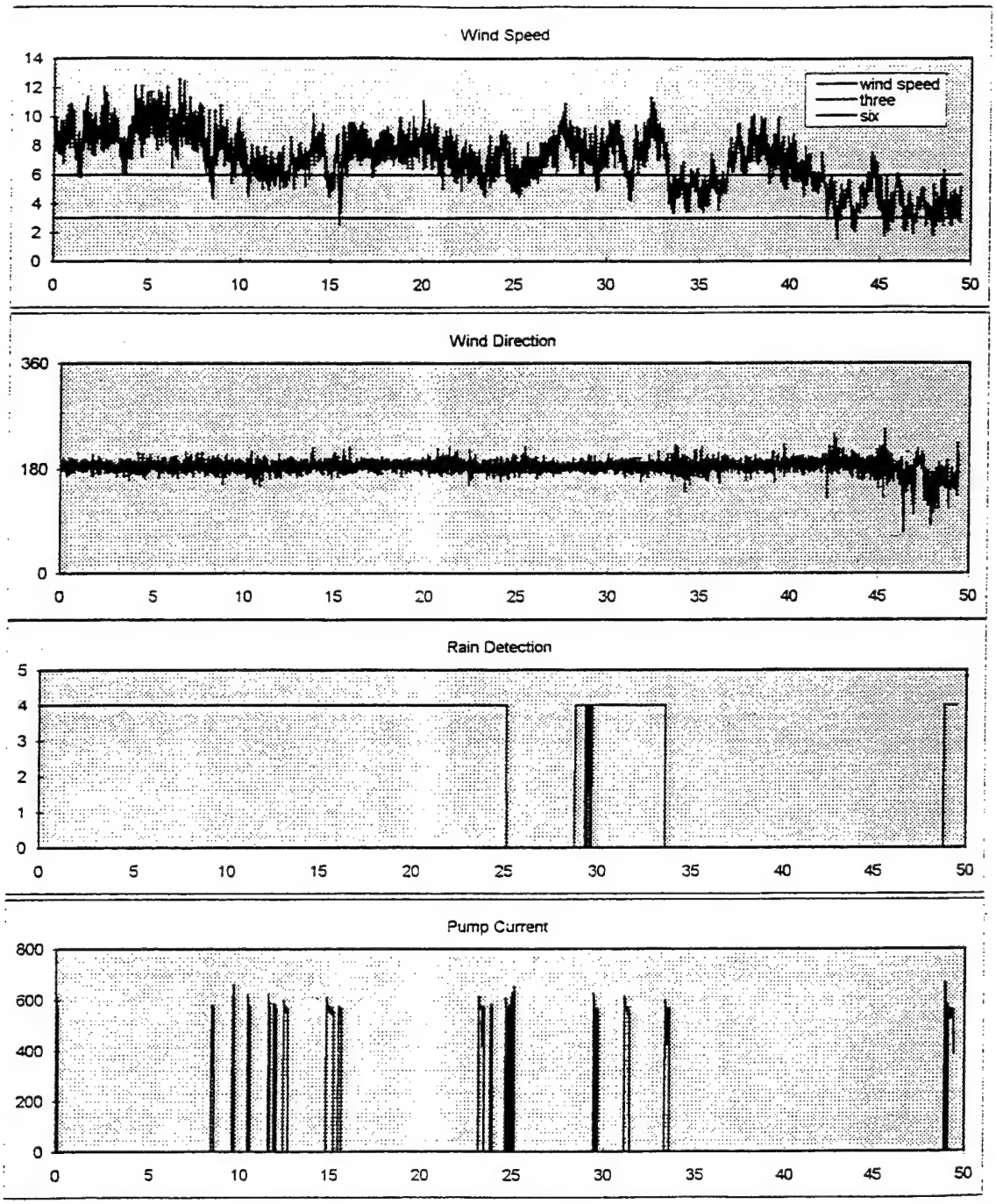


**Figure 8. Example of Data from Buoy-Mounted Aerosol Sampler during Sea Test of the summer of 1997. Time-series includes data for wind speed, wind direction, rain detector, and pump current. Time in hours and wind speed sector set to 3-6 m/s. For rain detector signal, 4= no rain and 0 = rain. File number is r4s1g1b.**

excellent at recording medium to large rain events. But small rain events (< 1 mm over a few hours) are hard to decipher from the background signal of the sensor (i.e., rolling of the water in the gauge as the buoy moves).

As quantified in figure 9 (file r4s3g1), at wind speeds less than 1 m/s the direction of the buoy varies greatly over periods of a few minutes. It appears that the buoy goes into a random walk under low wind speeds. There is less, but still substantial, variation in wind direction at wind speeds less than 2 and 3 m/s. Above 3 m/s, the vane does a good job of directing buoy into the prevailing wind. It must be appreciated that the direction and inclination is always changing as a buoy is moved around by winds, waves and currents. A large vane may reduce the variation under low winds speeds. In summary, keeping the direction to 180 plus or minus 20 degrees under mild to strong wind speeds is an important accomplishment. This means that aerosols, on average, reach the inlets of the sampler before they pass over the buoy. This helps reduce contamination. As noted in an earlier section, choosing the best construction materials is the best means of minimizing contamination.

### c. Five Day Filtration of Aerosols with the Buoy-Mounted Sampler

The majority of tests on the buoy-mounted sampler were of short duration, typically filtering through any one filter for 24 hr. or less. One longer sampling experiment (referred to as run 11) was carried out with the objective of collecting a weighable amount of sample so that the aerosol concentration could be quantified. A second objective was to determine if the air filtering rate varied over time, a point already discussed in section VI-e.

Seven 0.45 μm Millipore Durapore-type filters were pre-weighed in the laboratory on a five place ( to 0.00001 g) balance; these are called *tare* weights. Two filters remained in the laboratory and served as *lab controls*. The other five filters were loaded into the five filter modules on the buoy. The intention was to pump air through filters modules #1-3 for five days but not to filter air at all through filter modules #4 and #5. Hence, filters # 4 and #5 served as *buoy controls*. The lab and buoy controls allow one to determine if the tare weights vary over time. Ideally, the tare weights should remain constant. The five days refers to the duration of active filtration and therefore does not include periods of time when rain shut down the sampler.

This experiment proceeded smoothly until a large coastal storm on 21 August 1997 flipped the buoy over into a turbulent ocean. This event will be discussed at the end of this report. The buoy flipped during the middle of the five day sampling with filter #3. While filter #1 had been removed from the sampler prior to the storm, filters #2-5 remained in the sampler after the buoy was flipped and pounded in the surf for about 12 hr. The filters were removed on 22 August and returned to the laboratory for drying and weighing.

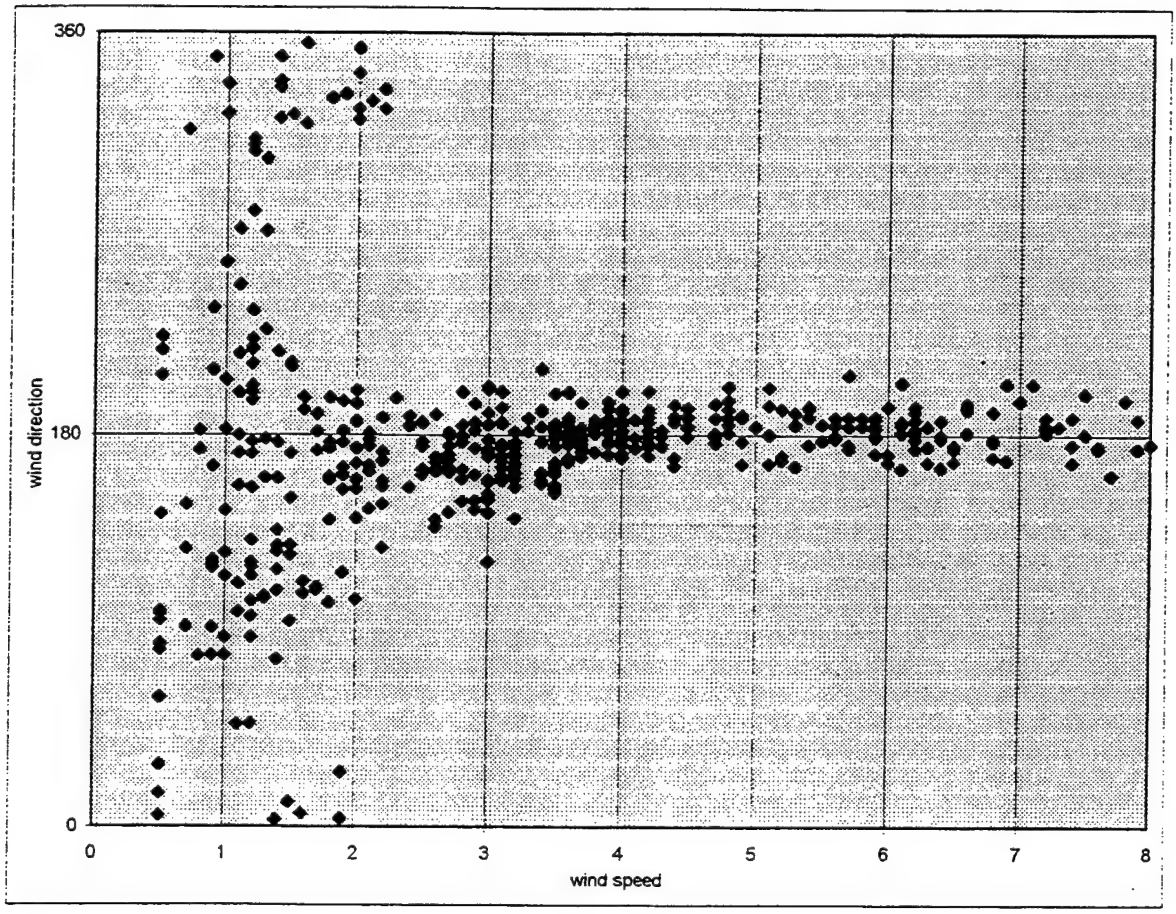


**Figure 9. Example of Data from Buoy-Mounted Aerosol Sampler during Sea Test of the summer of 1997. Plot of wind speed vs. wind direction. File number is r4s3g1.**

The results of the five-day filtering experiment are presented in table 3. Both the lab and buoy controls showed only a small amount of weight change in the tare values. The two buoy controls increased by 0.00007 and 0.00012 g. The laboratory controls increased even less (0.00001 - 0.00005 g). Filters #1 and #2 accumulated 2.38 and 1.32 mg of gray colored material. This translates into 33 and 18 μg of aerosol per $m^3$ of air. Such values are reasonable for air over coastal waters.

The rare earth element (REE) concentrations of one sample were measured in order to assess the feasibility of determining the trace element composition of buoy-collected aerosols. Filter 11-2 was cut in quarters and one section was leached in 1 ml of 4M $HNO_3$ for 1 day at room temperature. Blank Millipore Durapore filters were treated in the same manner. The acid leach solutions were then 0.45 μm filtered to remove particles and diluted to 4 ml with Milli-Q water. These solutions (now in 1M $HNO_3$) were then aspirated directly into a Finnigan Element ICP-MS (magnetic sector Inductively Coupled Plasma Mass Spectrometer). The REE concentrations of the solutions were then determined using appropriate standards. The REE concentrations of the aerosol #11-2 were blank corrected. The gravimetrically-determined weight of the aerosol on the 1/4 section of filter #11-2 was 0.000356 g.

The results of the REE analysis are summarized on figure 10. The REE concentrations in ppm (μg REE/g aerosol) range from 2.8 (Ce) to 0.008 (Lu). The REE concentrations of the aerosol were then normalized to the REE concentrations of shale which is a proxy for the upper crust. As shown in figure 10, the REE/shale ratio systematically decreases by a factor 3 from the lightest (La) to the heaviest (Lu) REE. If the aerosols were composed of dust from weathered crustal rock, then one would expect a flat pattern. The REE pattern of this aerosol clearly indicates a non-crustal source. The light REE enriched pattern suggests that this aerosol was generated from the combustion of oil products (Olmez et al. 1991).

In summary, five days of filtering can provide a substantial amount of aerosols (1.3-2.4 mg) for chemical analyses. The tare weights of 0.45 μm Durapore filters remained almost constant when deployed on a buoy.

### d. Overturning of the Buoy during a Storm

On 21 August 1997 a large coastal storm hit Vineyard Sound. Winds up to 55 mph and high seas (6-8 feet) overturned the buoy at 7:40 am. The buoy was then pounded for approximately 15 hr. and dragged about 200 m from its original location with its bottom weight still attached by its cable. The buoy was recovered on 22 August and towed back to Woods Hole. The buoy was due to have been removed from its three month test on 26 August.

## Table 3

### August 1997 - Buoy Run #11

### 5 -Day Filtering Test

### Aerosol Weight Collected on 0.45 um Durapore Filters

| Buoy sample | Filter Color | tare wt. [g] | avg. tare# | gross wt [g] | gross avg wt. [g] | net wt. [g] | net wt. [mg] | Conc. * ug/m3 air |
|---|---|---|---|---|---|---|---|---|
| #1 | dark gray | 0.15037 | | 0.15314 | | | | |
| | | 0.15046 | | 0.15244 | | | | |
| | | | 0.15041 | | 0.15279 | 0.00238 | 2.38 | 33.1 |
| #2 | med. gray | 0.14201 | | 0.14329 | | | | |
| | | 0.14200 | 0.14200 | 0.14334 | 0.14332 | 0.00132 | 1.32 | 18.3 |
| #3 ** | light gray | 0.13931 | | 0.13996 | | | | |
| | | 0.13936 | 0.13933 | 0.13998 | 0.139978 | 0.000648 | 0.648 | 9.0** |
| Buoy controls: | | | | | | | | |
| #4 | white | 0.14486 | | 0.14498 | | | | |
| | | 0.14492 | 0.14489 | 0.14496 | 0.14497 | 0.00007 | 0.07 | 1.0 |
| #5 | white | 0.14053 | | 0.14063 | | | | |
| | | 0.14048 | 0.14050 | 0.14061 | 0.14062 | 0.00012 | 0.12 | 1.7 |
| Lab controls: | | | | | | | | |
| #6 | | 0.14547 | | 0.14561 | | | | |
| | | 0.14553 | 0.14550 | 0.14549 | 0.14555 | 0.00005 | 0.05 | 0.69 |
| #7 | | 0.14263 | | 0.14270 | | | | |
| | | 0.14267 | 0.14265 | 0.14261 | 0.14266 | 0.00001 | 0.01 | 0.14 |

* based on a filtering rate of 10 lpm for 5 days or 72 m3 air

10 lpm = 14.4 m3/day

** sample #3 was being collected when buoy flipped so filter represents < 5 days of filtering

# duplicate weighing of samples for averages

buoy/run11.xls

Table 3

| | aerosol ppm [ug /g] | shale ppm | SNR (x100) |
|---|---|---|---|
| La | 1.53 | 41 | 3.74 |
| Ce | 2.79 | 83 | 3.36 |
| Pr | 0.34 | 10 | 3.42 |
| Nd | 1.19 | 38 | 3.13 |
| Sm | 0.232 | 7.5 | 3.09 |
| Eu | 0.043 | 1.61 | 2.64 |
| Gd | 0.204 | 6.35 | 3.22 |
| Tb | 0.024 | 1.23 | 1.96 |
| Dy | 0.132 | 5.49 | 2.41 |
| Ho | 0.023 | 1.34 | 1.71 |
| Er | 0.063 | 3.75 | 1.69 |
| Tm | | | |
| Yb | 0.059 | 3.51 | 1.68 |
| Lu | 0.008 | 0.61 | 1.27 |

SNR = shale normalized ratio

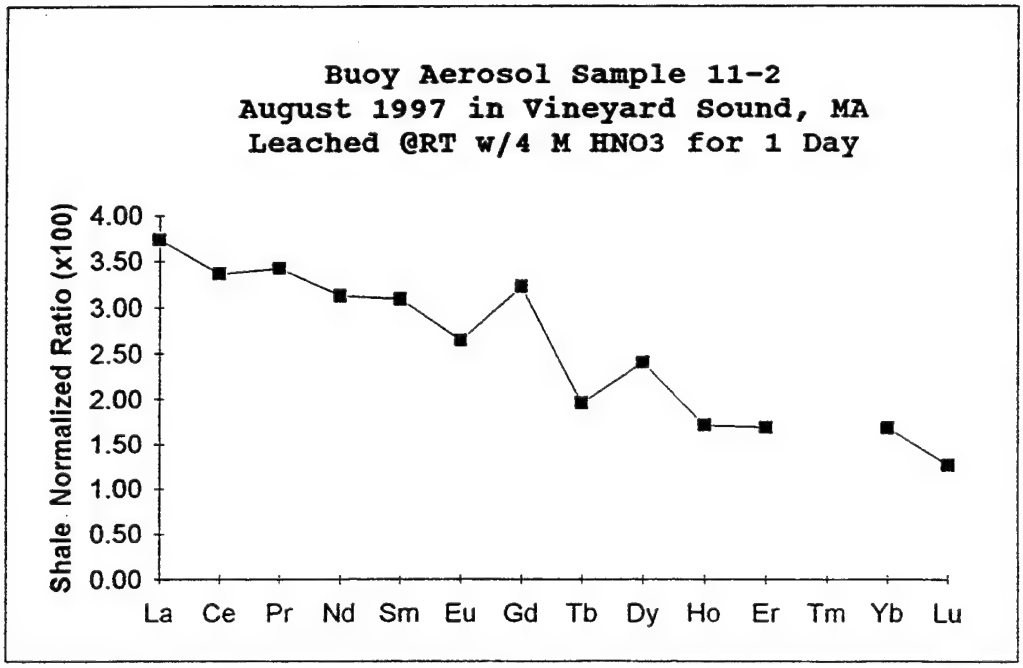


**Figure 10. Rare Earth Element Composition of WHOI Buoy #11-**

These discus buoys don't have a history of overturning when moored in the open ocean where storms produce even rougher seas (Rudnick et al. 1997). But, these buoys are not designed to be deployed in the surf zone. Being moored close to shore and in only 15 ft. of water, the August storm actually put the buoy in the surf zone. With 6 to 8 feet high surf being half the water depth, we surmise that a large torque on the short wire flipped the buoy. While being pounded by the seas, the buoy shifted back and forth from being upside down and to being sideways. In the upside down position, the top of the buoy was probably smashed into the sandy bottom. The bent iron frame, which extends above the upper deck of the buoy, attested to the force of hitting the bottom.

All the meteorological sensors (rain gauge, rain detector and anemometer) and the modem transmitter were lost at sea. The good news was that the aerosol sampler - the five filter modules and the control module - survived. Actually, the sampler did more than just survive. The only water that intruded the system was found in a short portion of the air sampling line. The vent to the air pumps always remained open, and no one-way flow valve was employed to block the reverse flow of air or water up the vent tube. Hence, seawater entered the vent hose, the three air pumps and the two flow meters. The water didn't penetrate any further. After being dried, the pumps worked fine but flow meters needed rebuilding. The control module and the filter modules were dry. In fact, the aerosol samples in filter modules #2-5 were intact and useable; filter #1 had been removed prior to the storm. The computer continued to collect meteorological data (bogus, of course) until we cut the wires after towing the buoy to the dock. The computer data allowed us to pinpoint the time of the buoy overturn.

In summary, the aerosol sampler was designed to withstand the harsh conditions on a buoy. While we planned for wind, rain, spray and rough seas, we didn't foresee having an overturned buoy. Surviving the coastal storm dramatically demonstrated the quality of engineering that went in the autonomous buoy-mounted aerosol sampler.

## IX. Future Directions

The next logical step is to mount an engineering and science test on an open ocean buoy. The Bermuda Testbed Mooring (Frye et al., 1996; Dickey et al., 1997) would be an ideal location as there is a large and predictable seasonal signal vis-à-vis the summer transport of dust from Africa to Bermuda (Arimoto et al., 1992; Prospero and Ness, 1986; Prospero and Carlson, 1972). We could also compare the temporal variation of dust at the BTM and on Bermuda. Lastly, the overriding science idea is to couple atmospheric deposition with upper ocean chemistry and biology. For example, does the deposition of dust lead to higher concentrations of dissolved Fe (and other metals) and to increases in phytoplankton production? Hence, our buoy-

mounted aerosol sampler would nicely compliment the in-water samplers/sensors currently deployed at the Bermuda Testbed Mooring. These include the trace metal water sampler of E. Boyle, the nitrate analyzer of H. Jannasch and optical and chlorophyll sensors of T. Dickey (Dickey et al., 1997, in review).

Improvements to the design of our sampler are being discussed. These include a reduction in the size and weight of the filter modules and a new carousel design for generating a time-series set of aerosol-embedded filters from a single compact module.

Buoys as research/monitoring platforms could go beyond aerosols and include other aspects of atmospheric chemistry. Having chemical sensors on buoys would provide real-time data on the variability and composition of aerosols, rainwater and selected trace gases. Real time data would provide valuable information for the studies of ocean, atmosphere and climate and their complex coupling. It is technologically feasible to develop and deploy an array of buoy-mounted samplers and sensors. For example, John Dacey, our WHOI colleague, has a cartridge system which scavenges DMS from air for later analysis in the laboratory. Modifying his system for our aerosol sampler would yield a DMS time-series of filtered air above the ocean/air boundary. Similarly, $SO_2$ can be scavenged from air. Ozone, a gas of immense significance in atmospheric chemistry (e.g. precursor to OH, the most important oxidant in the atmosphere), has the potential to be measured in real-time from buoys. The authors are collaborating with B. Heikes (University of Rhode Island) and T. Rawlins (Physical Sciences Inc.) on assessing the feasibility of developing a autonomous ozone instrument. With respect to rainwater, it is technologically feasible to modify existing collectors and design methods to measure nutrients and Fe concentrations in real time from a buoy. This is a priority task as the wet deposition of Fe and other trace elements can exceed dry deposition.

The authors have a proposal pending to design, build and test sensors which can measure the aerosol concentrations of dust and seasalt aerosols from ocean buoys. One sensor system that offers great promise for the real-time and in situ elemental analysis of aerosols is field portable x-ray fluorescence spectroscopy (XRF). XRF is a non-destructive technique which has been extensively applied to the analyses of aerosols embedded on filters (Haupt et al., 1995). Field portable refers to a small battery-powered XRF units where radioactive sources provide the excitation x-rays. (Such systems are similar to the one deployed on the Mars rover for determining the elemental composition of Martian soil and rocks.) This capability would allow us to distinguish between mineral dust, seasalt and perhaps NSS by measuring the concentrations of Fe, K, Ca, Mg, Cl and S.

In summary, one can envision a remotely controlled field laboratory in which buoy-mounted sensors allow one to study in real time the response of upper ocean biology and chemistry to pulses of dust. Real-time data on the Fe concentration of

aerosols and rainwater reaching the ocean's surface would allow researchers to trigger buoy-mounted water sensors and water samplers and sediment traps. These, in turn, could measure light scattering, chlorophyll, nutrients, dissolved $O_2$ and collect water and particles for the measurement of Fe, trace metals, Th-isotopes, organic carbon, phytoplankton species, dust, etc. Similarly, time-series air data on ozone, DMS and NSS from buoys could be coupled with in-water measurements of phytoplankton production, chlorophyll, turbulence and nutrients to more closely study the biogeochemical cycle of sulfur above and below the ocean/atmosphere boundary. Lastly, the production of seasalt aerosols could be related to wind stress at the sea surface.

## X. Acknowledgments

This project has been supported by the National Science Foundation (Ocean Technology and Interdisciplinary Coordination section) under grant OCE-94-23212. The field test on the AEROCE Bermuda tower was made possible by the generous cooperation of Richard Arimoto, Hal Maring, Cyril McCormick, Megan McKay, Joe Prospero and Tom Snowdon. Bob Weller and his group loaned and deployed the buoy. Special thanks to by Rick Trask and WHOI's rigging group for rescuing the buoy after it turned over and to Lois Koehnken for her editing help. The first author can be reached at esholkovitz@whoi.edu.

## XI. References


Andreae, M. O. (1996). Raising dust in the greenhouse. *Nature*, **380**, 389-390.

Andreae M. O. and P. J. Crutzen (1997) Atmospheric aerosols: biogeochemical sources and role in atmospheric chemistry, *Science*, **276**, 1052-1058.

Andreas, E. L., J. B. Edson, E. C. Monahan, M. P. Roualt, and S. D. Smith (1995). The spray contribution to net evaporation from the sea: a review of recent progress, *Boundary-Layer Meteorology*, **72**, 3-52

Arimoto, R., R. A. Duce and B. J. Ray (1989). Concentrations, sources and air-sea exchange of trace elements in the atmosphere over the Pacific Ocean. *Chemical Oceanography*, **10**, 107–149.

Arimoto, R., R. A. Duce, D. L. Savoie and J. M. Prospero (1992). Trace elements in aerosol particles from Bermuda and Barbados: concentrations, sources and relationships to aerosol sulfate, *J. Atmos. Chem.*, **14**, 439–457.

Charlson, R. J., J. E. Lovelock, M. O. Andreae and S. G. Warren (1987). Oceanic phytoplankton, atmospheric sulfur, cloud albedo and climate. *Nature*, **326**, 655- 661.

Church, T. M., A. Veron, C. Patterson, D. Settle, Y. Erel, H. R. Maring and A. R. Flegal (1990). Trace elements in the north Atlantic troposphere: shipboard results of precipitation and aerosols. *Global Biogeochem. Cycles*, **4**, 431–443.

Coale, K. H., S. E. Fitzwater, R. M. Gordon, K. S. Johnson and R. T. Barber (1996). Control of community growth and export production by upwelled iron in the equatorial Pacific Ocean. *Nature*, **379**, 621-624.

DeGrandpre, M. D. (1993). Measurement of seawater pCO2 using a renewable-reagent fiber optic sensor with colorimetric detection. *Anal. Chem.*, **65**, 331-337.

De Leeuw, G. (1986). Vertical profiles of giant particles close above the sea surface. *Tellus*, **38**, 51-61.

De Leeuw, G., Davidson K. L. , Gathman S. G., and Noonkester R. V. (1989). Modeling of aerosols in the marine mixed layer. SPIE Conference on Propagation Engineering. *SPIE Proc.*, **1115**, 8.

Dickey T. D. (1996) Bermuda Testbed Mooring Program, Bull Amer. Met. Soc., **76**, 584.

Dickey T. D., D. Frye, H. W. Jannasch, E. Boyle and A. H. Knap (1997) Bermuda sensor system testbed, *Sea Technology*, April, 81-86.

Dickey, T. D., M. Fyre, H. Stramska, E. Jannasch, E. Boyle, D. Manov, D. Sigurdson, J., J. McNeil, M. Stramska, A. Michaels, N. Nelson, D. Siegel, G. Chang, and J. Wu (in review). Preliminary results from the Bermuda Testbed Mooring Program. *Deep-Sea Res.*

DiTullio, G. R., and D. A. Laws (1991). Impact of an atmospheric-oceanic disturbance on phytoplankton community dynamics in the North Pacific Central Gyre. *Deep-Sea Res.*, **38**, 1305-1329.

Donaghay, P. L., P. S. Liss, R. A. Duce, D. R. Kester, A. K. Hanson, T. Villareal, N. W. Tindale, and D. J. Gifford (1991) The role of episodic atmospheric nutrient inputs in the chemical and biological dynamics of oceanic ecosystems. *Oceanogr.*, **4**, 62–70.

Duce, R. A., and N. W. Tindale (1991). Atmospheric transport of iron and its deposition in the ocean. *Limnol. Oceanogr.*, **36**, 1715-1726.

Duce, R. A. (1989). SEAREX: The Sea-Air Exchange Program. *In*: Chemical Oceanography. J. P. Riley and R. Chester (eds.). Academic Press: **10**, 107–149.
Duce, R. A., and N. W. Tindale (1991). Atmospheric transport of iron and its deposition in the ocean. *Limnol. Oceanogr.*, **36**, 1715-1726.

Duce, R. A., P. S. Liss, J. T. Merrill, E. L. Atlas, P. Buat-Menard, B. B. Hicks, J. M. Miller, J. M. Prospero, R. Arimoto, T. M. Church, W. Ellis, J. M. Galloway, L. Hansen, T. D. Jickells, A. H. Knap, K. H. Reinhardt, B. Schneider, A. Soudine, J. J. Toko, S. Tsunogai, R. Wollast, and M. Zhou (1991). The atmospheric input of trace species to the world ocean. *Global Biogeochem.Cycles*, **5**, 193–259.

Edson, J. B. (1994). Spray droplet modeling 1. Langranian model simulation of the turbulent transport of evaporating droplets. *J. Geophysical Res.*, **99**, 25295-25311.

Elrod, V. A., K. S. Johnson and K. H. Cole (1991). Determination of subnanomolar levels of iron (II) and total iron in seawater by flow injection analysis with chemiluminescence detection. *Anal. Chem.*, **63**, 893-898.

Eisenreich S. J. (1987) The chemical limnology of non-polar organic contaminants: PCBs in Lake Superior. In: *Sources and Fate of Aquatic Pollutants*, R. A. Hites and S. J. Eisenrecih (eds), Adv. Chem. Series, No 216, 393-469, Amer. Chem. Soc., Washington D. C.

Fairall, C. W., and K. L. Davidson (1986). Dynamics and modeling of aerosols in the marine atmospheric boundary layer. In: *Ocean Whitecaps and their Role in Air-Exchange Processes*. E.C. Monahan and G. Mac Niocaill (eds.). D. Reidel, Dordrecht: p.195-208.

Fitzgerald J. W. (1991) Marine aerosols: a review. *Atmospheric Environ.* **25A**, 533-545.

Frye, D., S. Merriam, B. Eastwood, J. Kemp, N. McPhee, S. Libertore. E. Hobart, A. Bocconcelli and S. Tarbell (1996) Atlantic Long-Term Oceanographic Mooring (ALTOMOOR), Woods Hole Oceanographic Institution Technical Report, WHOI-96-02, 88 p.

Galloway, J. N.(1988). Watox-85: A preface. *Atmospheric Environment*, **22**, 2343-2344.

Haupt, O., B. Klaue, C. Schaefer, and W. Dannecker (1995). Preparation of quartz fibre filter standards for x-ray fluorescence analysis of aerosol samples. *X-Ray Spectrometry*, **24**, 267-275.

Hosom, D. S., R. A. Weller, K. E. Prada, and R. P. Trask (1991). A three meter discus buoy with IMET meteorological sensors. *Marine Tech. Soc.*, **1**, 206-210.

Hosom, D. S., R. A. Weller, R. E. Payne and K. E. Prada (1995). The IMET (Improved Meteorology) ship and buoy system. *J. Atm. and Oceanic Technology*, **12**, 527-540.

Jannasch, H. W., K. S. Johnson and C. M. Sakamoto (1994) Submersible osmotically pumped analyzers for continuous determination of nitrate in situ. Anal. Chem., **66**, 3352-3361.

Jannasch, H. W., C. M. Sakamoto, and T. Dickey (1996). High resolution nutrient variability in the Sargasso Sea. *EOS*, **76**, 64.

Li, X., H. Maring, D. Savoie, K. Voss, and J. M. Prospero (1996). Dominance of mineral dust in aerosol light-scattering in the North Atlantic trade winds. *Nature*, **380**, 416-419.

Marra, J., T. Dickey, W. S. Chamberlin, C. Ho, T. Granata, D. A. Kiefer, C. Langdon, R. Smith, K. Baker, R. Bidigare, and M. Hamilton (1992). Estimation of seasonal primary production from moored optical sensors in the Sargasso Sea. *J. Geophy. Res.*, **97**, 7399-7412.

Martin, J. H., R. M. Gordon, and S. E. Fitzwater (1991). The case for iron. *Limnol. Oceanogr.*, **36**, 1793-1802.

Monahan, E. C. (1986). The ocean as a source of atmospheric particles. In*: The Role of Air-Sea Exchange in Geochemical Cycling.* P. Buat-Menard, (eds.).. D. Reidel, Dordrecht: p.129-163.

Monahan, E. C., C. W Fairall, K. L. Davidson, and P. A. Boyle (1983). Observed inter-relationship between 10m winds, ocean whitecaps and marine aerosols. Quart. *J. Roy. Meteorol. Soc.* **109**, 379 -392.

Monahan, E. C., D. E. Spiel, and K. L. Davidson (1986). A model of marine aerosol generation via whitecaps and wave disruption. In: *Ocean Whitecaps and their Role in Air-Exchange Processes*. E.C. Monahan, and G. Mac Niocaill (eds.). D. Reidel, Dordrecht: p.164-174.

Obata, H., H. Karatani, E. Nakayama (1993). Automated determination of iron in seawater by chelating resin concentration and chemiluminescence detection. *Analytical Chemistry*, **65**, 1524-1528.

Olmez, I., E. R. Sholkovitz, D. Hermann and R. P. Eganhouse (1991). Rare earth elements in sediments off Southern California: A new anthropogenic indicator. *Environmental Science and Technology*, **25,** 310-316.

Prospero, J. M., and T. Carlson (1972). Vertical and areal distribution of Saharan dust over the western Equatorial North Atlantic Ocean. *J. Geophys. Res.*, **77**, 5255–5265.

Prospero, J. M., and R. T. Ness (1986). Impact of the North African drought and El Niño on mineral dust in the Barbados trade winds. *Nature*, **320**, 735–737.

Prospero, J. M., M. Uematsu, and D. L. Savoie (1989). Mineral aerosol transport in the Pacific Ocean. *Chemical Oceanography*, **10**, 187–218.

Rudnick D. L., R. A. Weller, C. C. Eriksen, T. D. Dickey, J. Marra and C. Langdon. (1997) Moored instruments weather Arabian Sea Monsoons, Yield Data. *Eos*, **78**, 117, 120-121.

Sokolik I. N., and O. B. Toon (1996). Direct radiative forcing by anthropogenic airborne minerals aerosols. *Nature*, **381**, 681-683.

Tegan, I., A. A. Lacis, and I. Fung (1996). The influence on climate forcing of mineral from disturbed soils. *Nature*, **380**, 419-422.

Veron, A. J., T. M. Church, C. C. Paterson, Y. Erel, and J. T. Merrill (1992). Continental origin and industrial sources of trace metals in the northwest Atlantic troposphere. *J. Atm. Chem.*, **14,** 339-351.

Wallace, D. W. R., and C. D. Wirick (1992). Large air-sea gas fluxes associated with breaking waves. *Nature*, **356**, 694-696.

Weller, R. A., D. L. Rudnick, C. C. Eriksen, K. L. Polzin, N. S. Oakey, J. W. Toole, R. W. Schmitt, and R. T. Pollard (1991). Forced ocean response during the Frontal Air-Sea Interaction Experiment. *J. Geophys. Res.*, **96**, 8611-8638.

Woodcock, A. H. (1948). Note concerning human respiratory irritation associated with high concentrations of plankton and mass mortality of marine organisms. *J. Mar. Res.*, **7**, 57-62.

Wu, J. (1990a). Vertical distribution of spray droplets near the seasurface: influences of jet drop ejection and surface tearing. *J. Geophys. Res.* **95**, 9775-9778.

Wu, J. (1990b). On parameterization of sea spray. *J. Geophys. Res.* **95**, 18269-18279.

Wu J. and E. A. Boyle (1997) Lead in the western North Atlantic Ocean: Completed response to leaded gasoline phaseout. *Geochim. Cosmochim. Acta.* **61**, 3279-3283.

Yvon, S. A., E. S. Saltzman, D. J. Cooper, T. S. Bates, and A. M. Thompson (1996). Atmospheric sulfur cycling in the tropical Pacific marine boundary layer (12°S, 135°W): A comparison of field data and model results 1. Dimethylsulfide. *J. Geophys. Res.* **101**, 6899-6909.

# Appendix

## A-I. Control Module and Filter Module

Figures A1, A2 and A3 and tables A1 and A2 provide schematic diagrams of the control and filter modules and a parts lists of their components. With respect to the filter module, figure A2 describes the main unit with the inlet, ball valve and vacuum port and figure A3 describes the washdown unit. The parts list in Table A2 covers both figure A2 and A3, that is the whole filter module.

## A-II. Junction Box on Bermuda Tower

The Junction Box (JB) was mounted on the Bermuda tower an d served as a junction between the AC power from the tower and the aerosol sampler. The JB converted the towers AC power to 24 vdc required by the aerosol sampler. When the AC power was turned off during periods of out-of-sector wind conditions or maintenance, the JB box provided 24 vdc to the sampler. This battery power kept the control module in a standby condition for periods of minutes to days over the four month test. The JB was housed in a Rose Co. fiberglass enclosure with a gasket sealed cover. A wiring diagram is shown in Figure A4. The box has five stuffing tubes for cable access located in the bottom. The JB provides 24 vdc main power, 24 vdc backup power, and a sector switch contact closure for in-sector sampling control. The main 24 vdc is converted from 120 vac using a fixed voltage power supply. The back-up 24 vdc is derived from two sets of two 12 vdc batteries in series which provide a total of 34 ah (2 x 17 ah) at 24 vdc. The 120 vac, used to power the high volume aerosol samplers on the AEROCE tower, is on only when the wind is in sector and it is not raining. This 120 vac causes an ac relay to close, providing a switch closure for WHOI's aerosol sampler to indicate in sector sampling. Hence, the AEROCE and WHOI aerosol samplers were always filtering air at the same time.

## A-III. Rain Detector on Buoy

A WHOI made rain detector was fabricated using parts of a design from Tom Snowdon at Miami University. A stainless steel grid and plate were provided by Tom. These were assembled on a WHOI built black delrin box that also housed the electronics. The electronics are based on a fluid level detector chip (LM1830 /National Semiconductor) that supplies an ac voltage to the grid and detects a change in the leakage impedance. The ac voltage is used to prevent electrolytic corrosion. The unit requires 18 - 30 vdc supply voltage and outputs a 5 vdc logic that is high when water is on the grid. The units used by the University of Miami have an internal heater so that water can be evaporated as soon as possible after the rain has stopped. For use on a buoy, a heater is not feasible because of the power requirements. The unit used took about 1 hour to recover after water was splashed on the grid. This

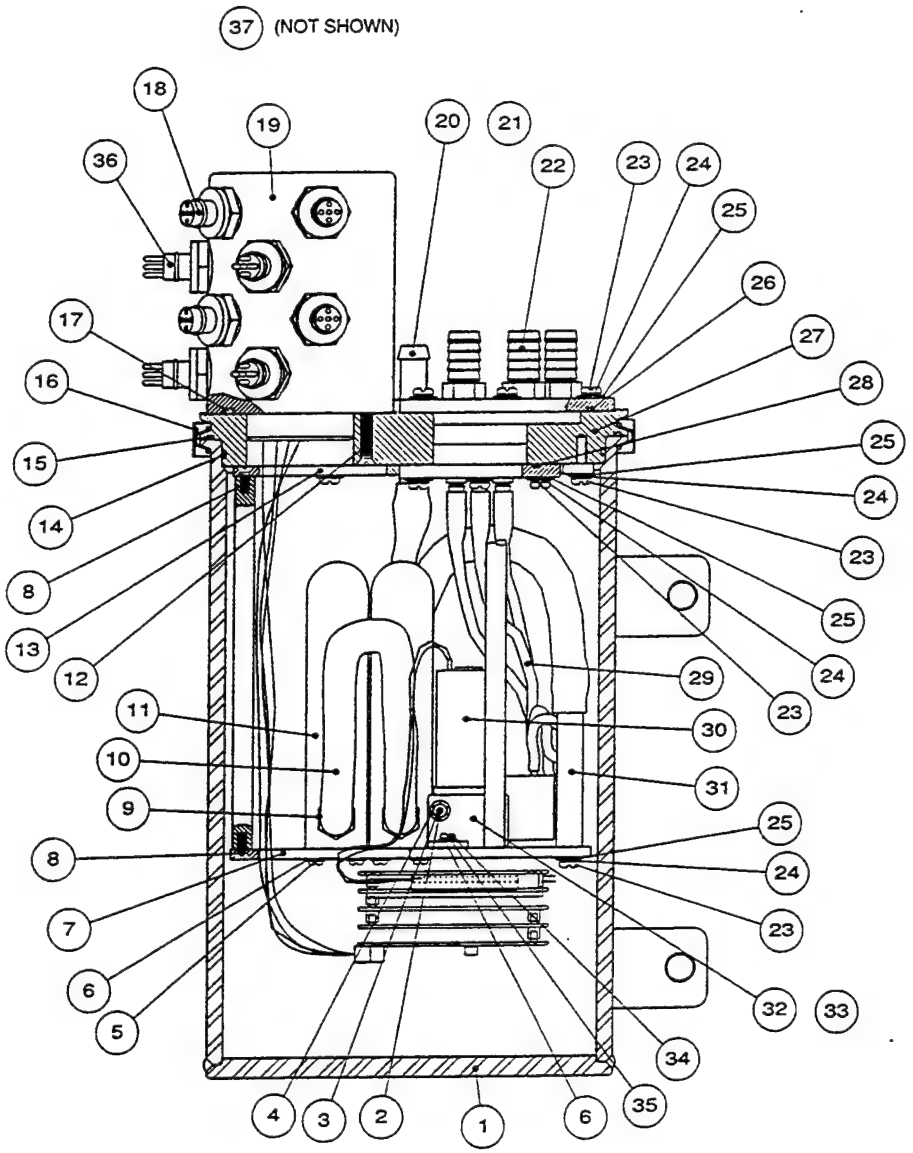


| | | | |
|---|---|---|---|
| PROJECT NO. 823212.00 | | WOODS HOLE OCEANOGRAPHIC INSTITUTION<br>APPLIED OCEAN PHYSICS & ENGINEERING DEPARTMENT<br>WOODS HOLE, MASSACHUSETTS, 02543 | |
| DRAWN R. ARTHUR | DATE 18SEPT97 | TITLE | |
| CHECKED | | CONTROL MODULE | |
| APPROVED | | | |
| FINISH | SIZE D | DWG. NO. 20038501 | REV. |
| | SCALE 1:1 | RELEASE DATE | SHEET 1 OF 1 |

**Figure A-1. Control Module and Filter Module**

| ITEM | PART OR DWG. NO. | DESCRIPTION | QTY |
|---|---|---|---|
| | | | |
| | | | |
| | | | |
| 37 | Lenz No. 5 STP-SS-SAE | SAE Port Plug | 4 |
| 36 | BHMC-5M-SAE-SS-1/2 | Male Bulkhead Connector | 4 |
| 35 | | No. 6 Lock Washer, Stainless Steel | 2 |
| 34 | | 6-32 x 3/8 Pan Head Screw, Stainless Steel | 2 |
| 33 | 200412-5 | Left Mounting Bracket, Air Pump | 1 |
| 32 | 200412-4 | Right Mounting Bracket, Air Pump | 1 |
| 31 | 200408-3 | Pump Exhaust Fitting | 1 |
| 30 | KNF NMP50 | Micro Diaphragm Pump | 3 |
| 29 | | 3/16 Silicone Tubing | 6 |
| 28 | | 2-136, Buna N O-Ring, 70 Durometer | 1 |
| 27 | 200411-2 | End Cap, Electronics Housing | 1 |
| 26 | | 2-151, Buna N O-Ring, 70 Durometer | 1 |
| 25 | | No. 10 Flat Washer, Stainless Steel | 18 |
| 24 | | No. 10 Lock Washer, Stainless Steel | 18 |
| 23 | | 10-32 x 3/4 Pan Head Screw, Stainless Steel | 16 |
| 22 | 200413 | Hose Adapter Plate | 1 |
| 21 | ASA-568A-908 | 3-908 Silicone O-Ring, 65-75 Shore A Durometer | 1 |
| 20 | 200408-2 | Exhaust Port | 1 |
| 19 | 200414 | Multi Connector Header | 1 |
| 18 | BHMC-5F-SAE-SS-1/2 | Female Bulkhead Connector | 8 |
| 17 | | 2-233, Buna N O-Ring, 70 Durometer | 1 |
| 16 | Clampco V0133100N-0813-S2 | Retaining Clamp, Stainless Steel | 1 |
| 15 | | 2-169, Buna N O-Ring, 70 Durometer | 1 |
| 14 | | 2-167, Buna N O-Ring, 70 Durometer | 1 |
| 13 | 200412-2 | Chassis Retaining Ring | 1 |
| 12 | | 10-32 x 1-1/2 Flat Head Screw, Stainless Steel | 5 |
| 11 | Sierra Instruments | Top Trak Series 820 Flow Meter | 2 |
| 10 | | 1/2 I.D. x 3/4 O.D. Tygon Tubing | 3 |
| 9 | McMaster-Carr 5372K123 | Nylon Barbed Fitting, 1/2 Tube I.D. x 1/4 NPT Right Angle | 4 |
| 8 | | 10-32 x 1/2 Flat Head Phillips Screw, Stainless Steel | 6 |
| 7 | 200412-3 | Chassis Plate | 1 |
| 6 | | No. 6 Flat Washer, Stainless Steel | 6 |
| 5 | | 6-32 x 1/2 Self Tapping Pan Head Phillips Screw | 4 |
| 4 | | No. 4 Flat Washer, Stainless Steel | 4 |
| 3 | | 4-40 Nyloc Hex Nut, Stainless Steel | 4 |
| 2 | | 4-40 Stainless Steel Threaded Rod | 2 |
| 1 | 200411 | Electronics Housing | 1 |

| | | | |
|---|---|---|---|
| PROJECT NO./DESCRIPTION: 823212.00 | | WOODS HOLE OCEANOGRAPHIC INSTITUTION<br>APPLIED OCEAN PHYSICS & ENGINEERING DEPARTMENT<br>WOODS HOLE, MASSACHUSETTS, 02543 | |
| DRAWN: R. ARTHUR | DATE: 17SEPT97 | TITLE: CONTROL MODULE | |
| CHECKED | | | |
| APPROVED | | SIZE: A / DWG. NO.: 200419 / REV. | |
| | | RELEASE DATE / SHEET 1 OF 1 | |

**Table A-1: Parts List for Control Module**

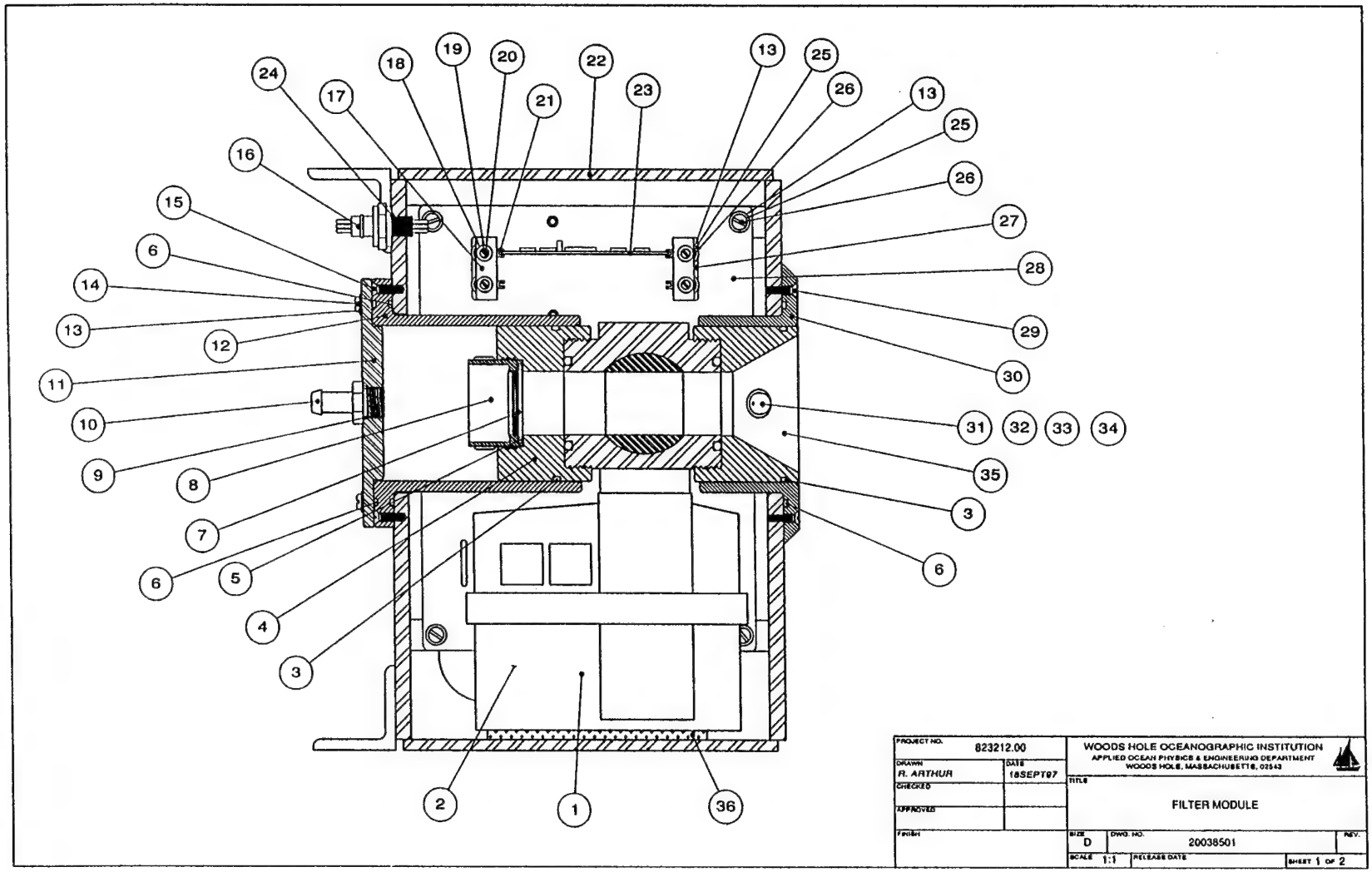


**Figure A-2: Filter Module (Ball Valve View)**

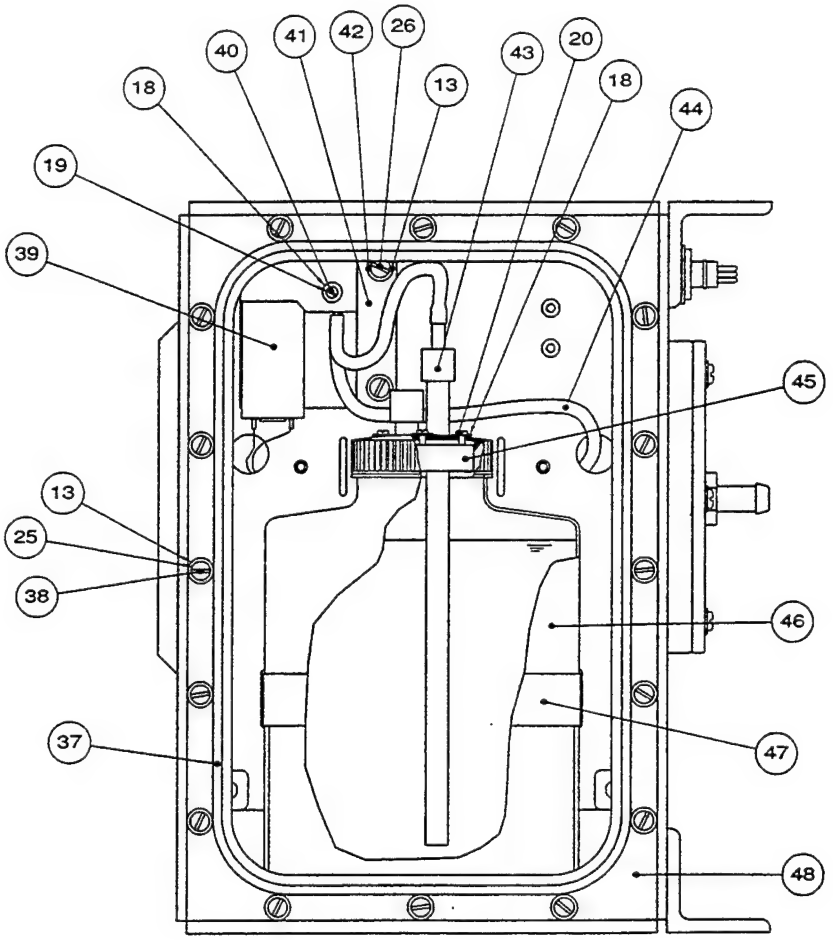


| | | | |
|---|---|---|---|
| PROJECT NO. 823212.00 | | WOODS HOLE OCEANOGRAPHIC INSTITUTION<br>APPLIED OCEAN PHYSICS & ENGINEERING DEPARTMENT<br>WOODS HOLE, MASSACHUSETTS, 02543 | |
| DRAWN *R. ARTHUR* | DATE *18SEPT97* | TITLE<br>FILTER MODULE<br>(WASH DOWN UNIT) | |
| CHECKED | | | |
| APPROVED | | | |
| FINISH | | SIZE D | DWG. NO. 20038501 REV. |
| | | SCALE 1:1 | RELEASE DATE SHEET 2 OF 2 |

**Figure A-3: Filter Module (Wash Down Unit View)**

| ITEM | PART OR DWG. NO. | DESCRIPTION | QTY |
|---|---|---|---|
| 40 | | 4-40 x 1-1/2 Pan Hd Phillips, Stainless Steel | 2 |
| 39 | KNF NF1.30 | Micro Diaphragm Liquid Pump | 1 |
| 38 | McMaster-Carr 91772A832 | 10-32 X 7/8 PAN HD PHILLIPS SCREW, S.S. | 32 |
| 37 | McMaster-Carr 96505K23 | 1/8 X 37.86 IN. SILICONE 0-RING | 2 |
| 36 | | Foam Rubber Pad | 1 |
| 35 | 200395-4 | Inlet Support | 1 |
| 34 | | 1/4 Flat Washer, Stainless Steel | 2 |
| 33 | McMaster-Carr 91832A029 | 1/4-28 Nyloc Hex Nut, Stainless Steel | 2 |
| 32 | McMaster-Carr 9752 K112 | AS568A Dash 902, 90 shore A O-Ring | 2 |
| 31 | 200395-6 | Water Jet | 2 |
| 30 | 200395-5 | Inlet Support Tube, Ball Valve | 1 |
| 29 | McMaster-Carr 91771A829 | 10-32 x 1/2 Flat Hd.Phillips, S.S. | 6 |
| 28 | 200397 | Housing Partition | 1 |
| 27 | 200381 | PC Card Mounting Bracket | 2 |
| 26 | McMaster-Carr 91772A827 | 10-32 x 3/8 Pan Hd.Phillips, S.S. | 10 |
| 25 | | No. 10 Lock Washer, Stainless Steel | 40 |
| 24 | | 3-905 Buna N O-Ring, 70 Durometer | 1 |
| 23 | WHOI DU03003 | Dust Controller Board | 1 |
| 22 | 200394 | Aerosal Housing | 1 |
| 21 | | Modified Nylon Card Guide | 4 |
| 20 | McMaster-Carr 91772A108 | 4-40 x 3/8 Pan Hd.Phillips, S.S. | 8 |
| 19 | | No. 4 Lock Washer, Stainless Steel | 6 |
| 18 | | No. 4 Flat Washer, Stainless Steel | 10 |
| 17 | 200381B | PC Card Retainer | 1 |
| 16 | BHMC-5M-SAE-SS-1/2 | Male Bulkhead Connector | 1 |
| 15 | McMaster-Carr 91771A831 | 10-32 x 3/4 Flat Hd.Phillips, S.S. | 6 |
| 14 | McMaster-Carr 91772A833 | 10-32 x 1 Pan Hd.Phillips, S.S. | 6 |
| 13 | | No. 10 Flat Washer, Stainless Steel | 48 |
| 12 | 200395-1 | Support Tube, Ball Valve | 1 |
| 11 | 200395-2 | Filter Cover | 1 |
| 10 | 200408-1 | 1/2 in. Tube Fitting | 1 |
| 9 | ASA-568A-908 | 908 Silicone O-Ring,65-75 Shore A | 1 |
| 8 | 2003841 | Filter Holder | 1 |
| 7 | | Filter | 1 |
| 6 | ASA-568A-247 | 2-247 Silicone O-Ring,65-75 Shore A | 3 |
| 5 | 200384 | Teflon O-Ring | 1 |
| 4 | 200395-3 | Filter Holder | 1 |
| 3 | ASA-568A-238 | 2-238 Silicone O-Ring,65-75 Shore A | 2 |
| 2 | 199.190.138 | Two Aux. Switches for EA20 DC Actuator | 1 |
| 1 | 199.112.237 | Geo. Fisher 1-1/2 Ball Valve w/ 24VDC | 1 |

| | | | |
|---|---|---|---|
| PROJECT NO./DESCRIPTION: 823212.00 | | WOODS HOLE OCEANOGRAPHIC INSTITUTION<br>APPLIED OCEAN PHYSICS & ENGINEERING DEPARTMENT<br>WOODS HOLE, MASSACHUSETTS, 02543 | |
| DRAWN: R. ARTHUR | DATE: 17SEPT97 | TITLE: FILTER MODULE | |
| CHECKED | | | |
| APPROVED | | SIZE: A | DWG. NO.: 200419 |
| | | RELEASE DATE | SHEET 1 OF 2 |

Table A-2, part 1: Parts List for Filter Module

| | | | |
|---|---|---|---|
| 48 | 200399 | Cover, Aerosal Housing | 2 |
| 47 | | Velcro Strap | 1 |
| 46 | | Water Bottle | 1 |
| 45 | 200415 | Bottle Cap Adapter | 1 |
| 44 | | Silicone Tubing | 3 |
| 43 | | | |
| 42 | McMaster-Carr 9600K23 | 3/16 Hole x 3/32 Groove, Rubber Grommet | 2 |
| 41 | 200382 | Pump Mounting Bracket | 1 |
| ITEM | PART OR DWG. NO. | DESCRIPTION | QTY |

| | | | |
|---|---|---|---|
| PROJECT NO./DESCRIPTION: 823212.00 | | WOODS HOLE OCEANOGRAPHIC INSTITUTION<br>APPLIED OCEAN PHYSICS & ENGINEERING DEPARTMENT<br>WOODS HOLE, MASSACHUSETTS, 02543 | |
| DRAWN: R. ARTHUR | DATE: 17SEPT97 | TITLE: FILTER MODULE | |
| CHECKED | | | |
| APPROVED | | SIZE: A / DWG. NO.: 200419 | REV. |
| | | RELEASE DATE | SHEET 2 OF 2 |

**Table A-2, part 2: Continued**

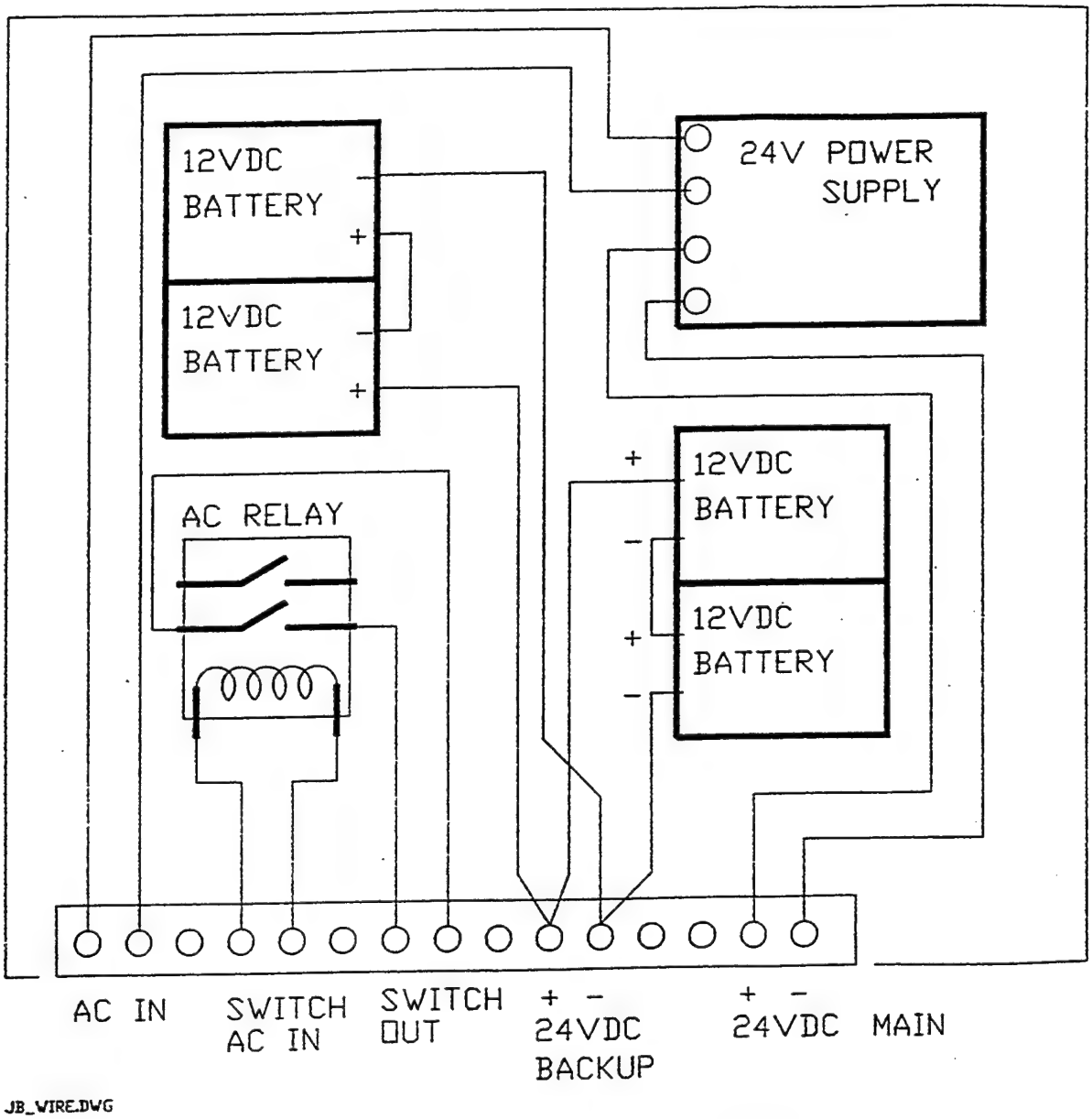


**Figure A-4: Junction Box Wiring Diagram**

was tested several times during the buoy deployment offshore of WHOI. Considering the normal sample times of perhaps 2 days, the one hour recovery time seems reasonable for buoy use. Mechanical drawings of the grid plates and mounting box as well as a schematic of the circuit are presented in Figures A5-A8.

## A-IV. Microprocessor/Controller Hardware

This section contains detailed technical information on the computing hardware and software aspects of the control module and filter module. While the main text uses the term "control module", the appendix uses the term "Sample Controller Unit" or SCU. Similarly, the text refers to the "filter module". In the appendix, the term "Dust Sample Unit" or DSU is used. In some sections of the appendix readers will be referred to figures and photographs presented in the main text.

### 1. Introduction

The controller hardware for the DBX is distributed between a main Sample Controller Unit (SCU) and the five Dust Sample Units (DSU) as shown in the block diagram from the main text of this report (figure 1). The individual DSU's communicate with the SCU via RS-485; a 4 wire cable interconnects the SCU and each DSU, providing +24V power and RS-485 communications. This architecture is an outgrowth of a technique developed under IMET, where each instrument is individually addressable. For reliability in harsh, at-sea conditions, this system has evolved to put each instrument (in this case, the individual DSU's) on its own power and communications link; no individual DSU failure can stop the entire system.

### 2. Sample Controller Unit (SCU)

The SCU (or control module) is the core of the sampling system. Block and schematic diagrams and photographs of the SCU can be found in the main text (figs. 1 and 3 and photographs 1 and 3). In the main housing are a Onset TattleTale Model 8 (TT8) controller with Onset PCMCIA Interface, the three air pumps and two flow meters used in the system. An air distribution manifold allows up to 5 DSU's to be connected. An electrical distribution block holds connectors for the 5 DSU power and communication cables, main system power cable, sensor cables for the RM Young Wind sensor, RM Young Precipitation sensor, the rain detector, and a "console" cable for test and deployment use. This electrical distribution is shown in figure A9 which is a block diagram for the system control unit.

The TT8 controller and PCMCIA board are mounted on one of a pair of 4" x 5" PC boards. The WHOI-designed boards, DUST TT8 Control Board, and 5 Channel RS-485 and A/D Expansion Interface, mount at the bottom of the SCU housing and interconnect to the pumps, flow meters, and miscellaneous connectors via individual twisted cables with AMP MT connectors for easy disconnect.

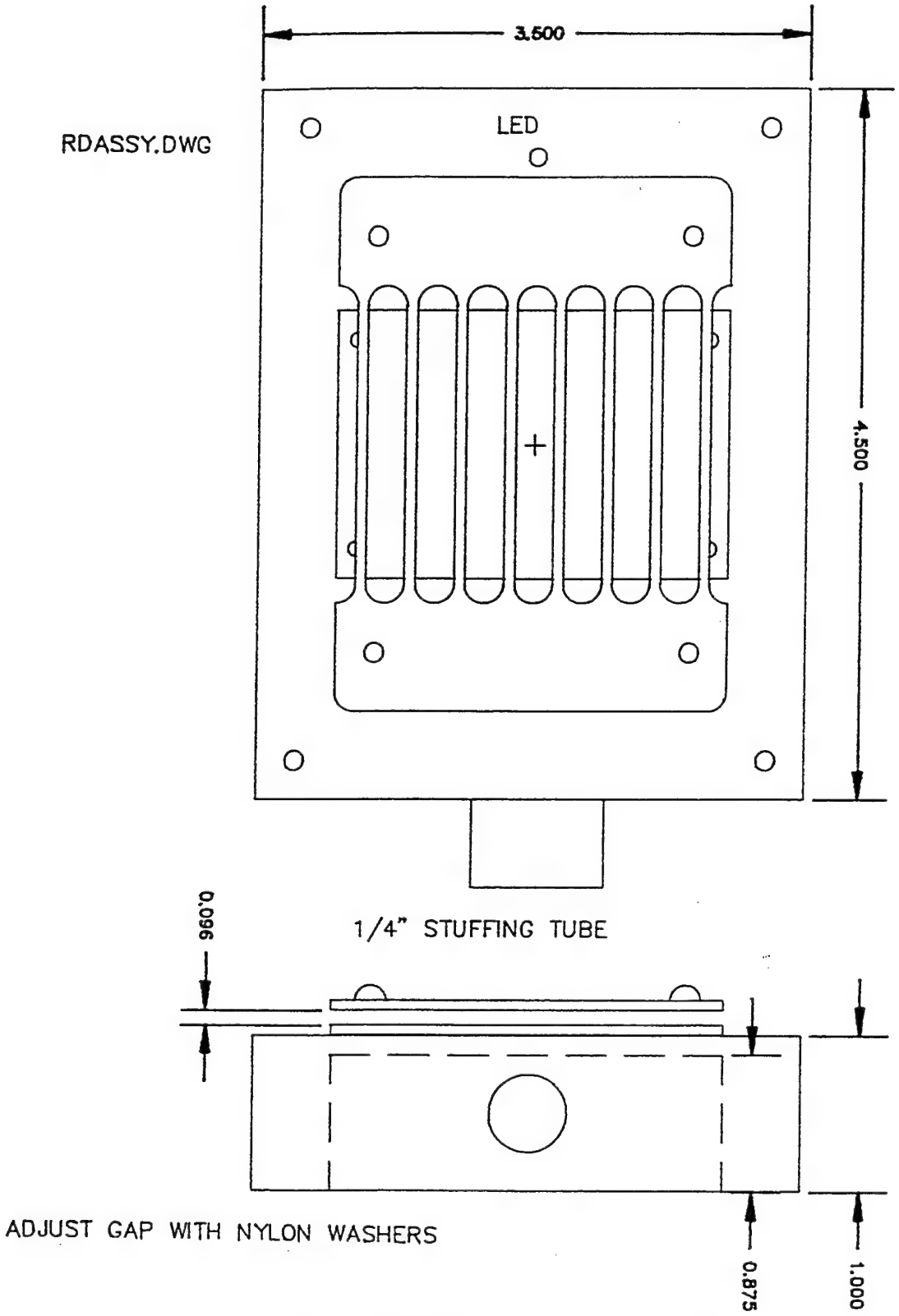


**Figure A-5: Rain Detector Assembly**

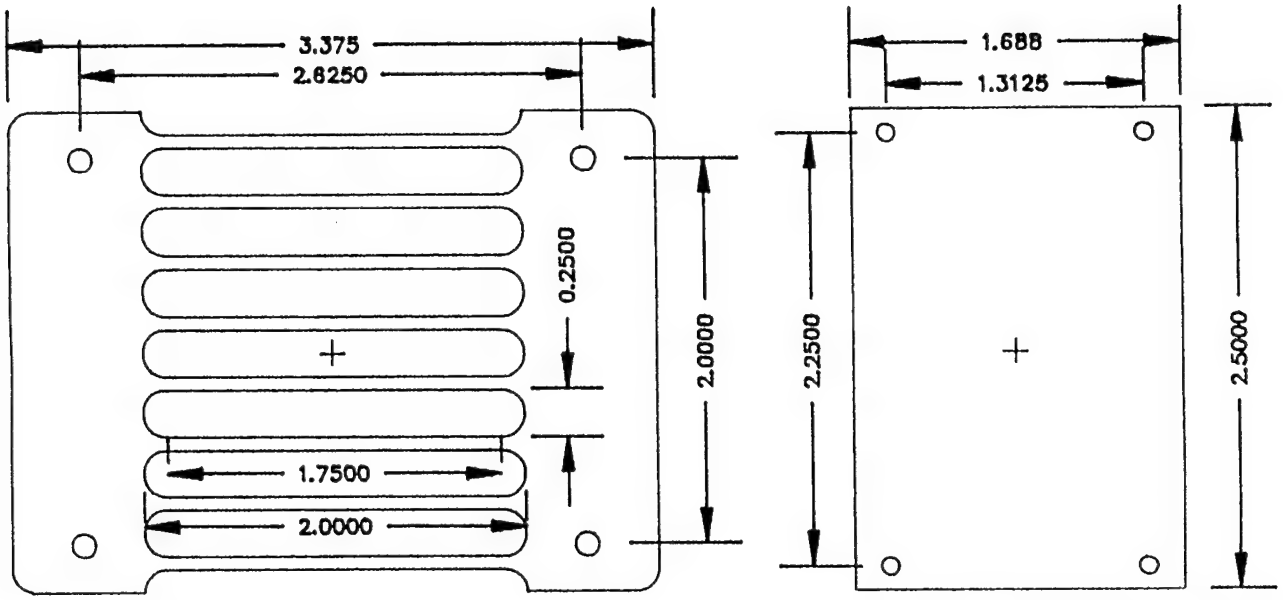


0.0625" 304 SS PLATE
SILVER SOLDER SS BOLTS IN EACH HOLE, 3/4" LONG

4 HOLES, TAPPED 4–40 THROUGH
SILVER SOLDER THREADED ROD IN 4 HOLES, 1/2" LONG

RDPLATS.DWG

**Figure A-6: Rain Detector Plates**

BOTTOM COVER, 3.5 X 4.0, WITH (A) HOLES TO MATCH BOX

A – 4 HOLES, CLER FOR 8–32 THRU

B – 4 HOLES CLEAR FOR 4–40 BOLTS, THRU

C – 1 HOLE, 0.115 D THRU, WITH 7/16 D BORE, 0.875 DEEP

D – 4 HOLES, CLEAR FOR 4–40 THRU, WITH 7/16 D BORE 0.875 DEEP (FOR NUT DRIVER)

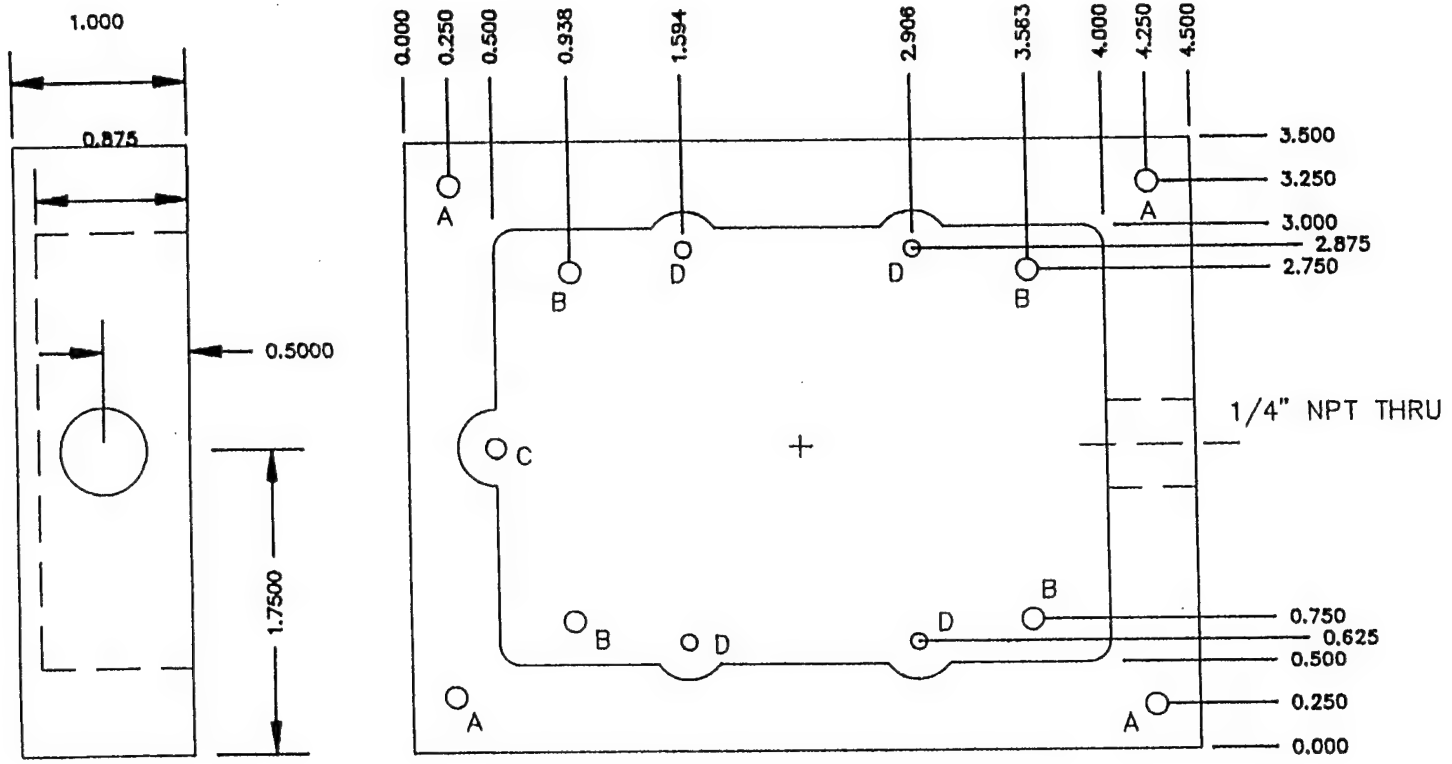


RDBOX.DWG

**Figure A-7: Rain Detector Box**

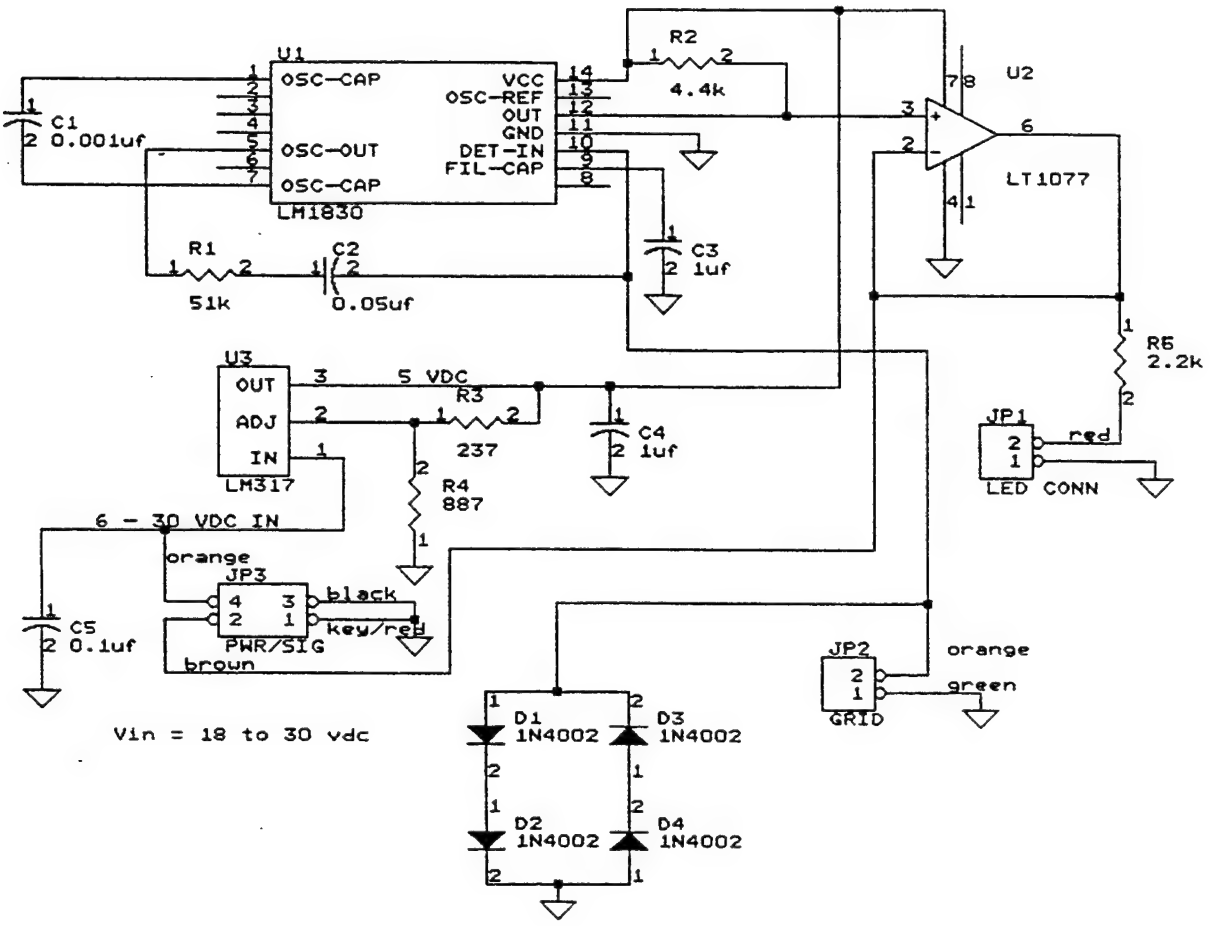


| | | |
|---|---|---|
| WOODS HOLE OCEANOGRAPHIC INSTITUTION<br>UPPER OCEAN PROCESSES GROUP<br>WOODS HOLE, MA 02543 USA<br>DRAWN: DH | | |
| Size<br>A | Document Number<br>RAINDET.SCH | REV<br>- |
| Date: September 17, 1997 | Sheet 1 of 1 | |

**Figure A-8: Rain Detector Schematic**

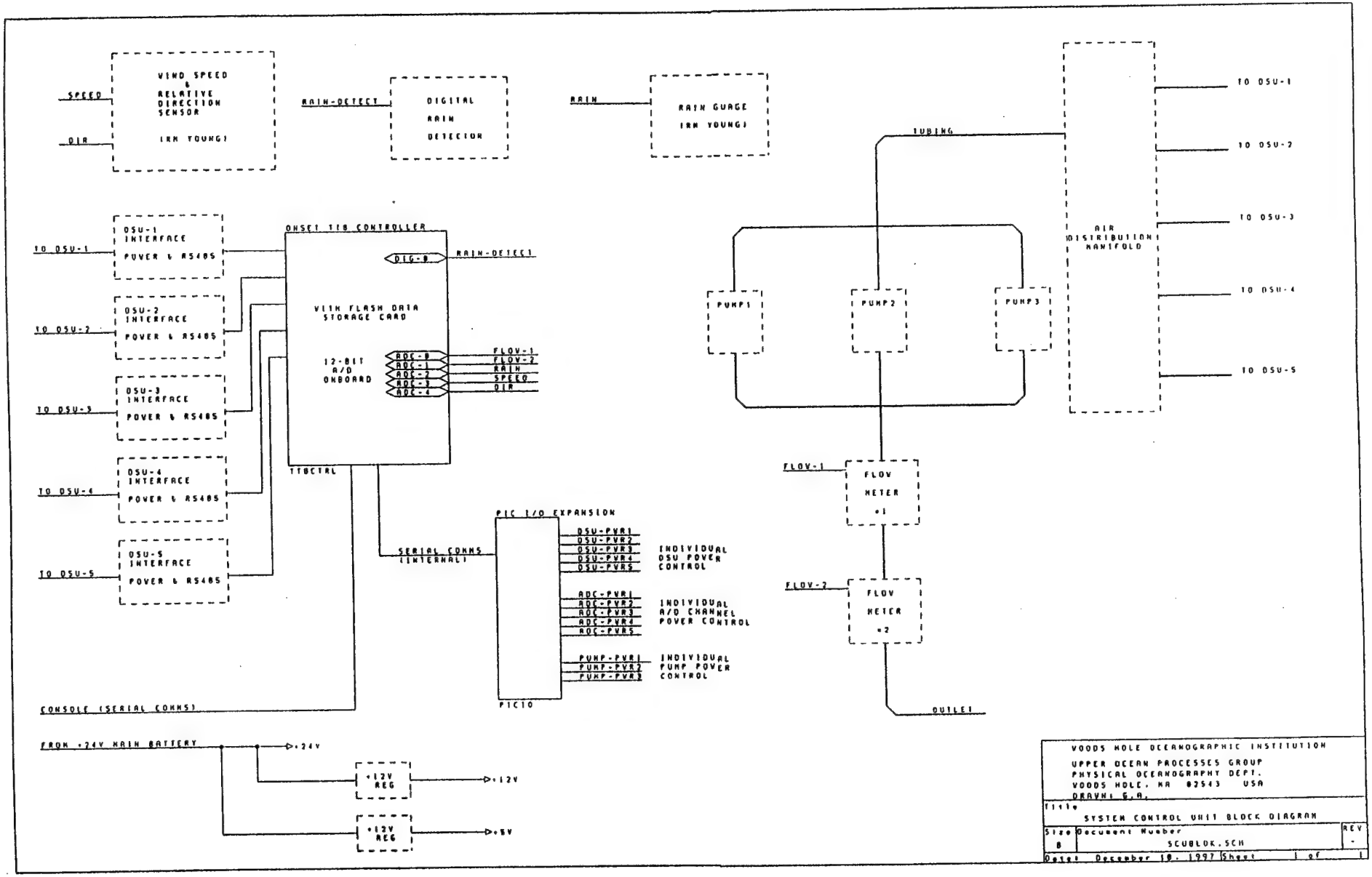


**Figure A-9: System Control Block Diagram**

### 3. TattleTale 8 Control Board

The schematic diagram of the TattleTale 8 is shown in Figure A10 (Document number DUSTT8IF). The Onset TT8 is mounted on the control board via the TT8's 16-pin and 20-pin expansion I/O connectors (two single row, .100 spacing, headers), after mounting the Onset PCMCIA Interface board using Squishy Bus connectors per Onset. The control board provides both regulated +12V (LM7812) and +5V (7663) for those parts of the system which require these voltages to be derived from the +24V main battery system. Main +24V power and RS-232 console communications comes onboard via P4. A group of 3 FET switches with inline fuses controls +24V power to the 3 air pumps via connectors P1 through P3. A very low resistance current-monitoring shunt is placed in the pump power common line (MGND). All other I/O, both control lines and RS-485 interfaces, as well as A/D signal conditioning, resides on the expansion interface board described later. Interconnection to this expansion board is via 26-pin ribbon cable at P7 and 10-pin ribbon cable at P8.

Additional I/O line expansion for the TT8 is provided by a PIC16C73 microcontroller on the control board. This microcontroller communicates via 9600 baud serial lines (at CMOS levels) connected to two TT8 TPU port lines (further description in Section V - Software). The PIC I/O expansion provides control lines for the 3 FET pump power switches on this board, and 10 I/O lines for power control of similar FET switches on the expansion interface board. The PIC provides a simple way to expand two TT8 I/O lines into 13 additional lines needed by the system.

A spare connector for backup +24V battery is provided, though not used in the buoy system. Additionally, +24V main power detection, while provided, is currently unused in the buoy system. (These provisions were used in earlier shore testing on Bermuda, summer 1996).

### 4. RS-485 and A/D Expansion Interface

The second board of the pair in the SCU provides most of the interface circuitry and header connectors for all the cables coming from the pumps, flow meters, and system end cap. A schematic diagram is shown in figure A11 (document number DUST8EXP). The interconnections from the TT8 control board come in via 10-pin ribbon cable at P6 and 26-pin ribbon cable at P7. This board is stacked on the control board using 1/2" 4-40 standoff hardware. The two primary uses of the expansion interface are to provide RS-485 plus power to the individual Dust Sample Units (DSU) and to provide A/D conditioning for the flow meters and external sensors .

A group of 5 RS-485 interface IC's (MAX485 or equivalent) and associated FET switches are used to connect to the 5 DSU's via connectors P1 through P5. All

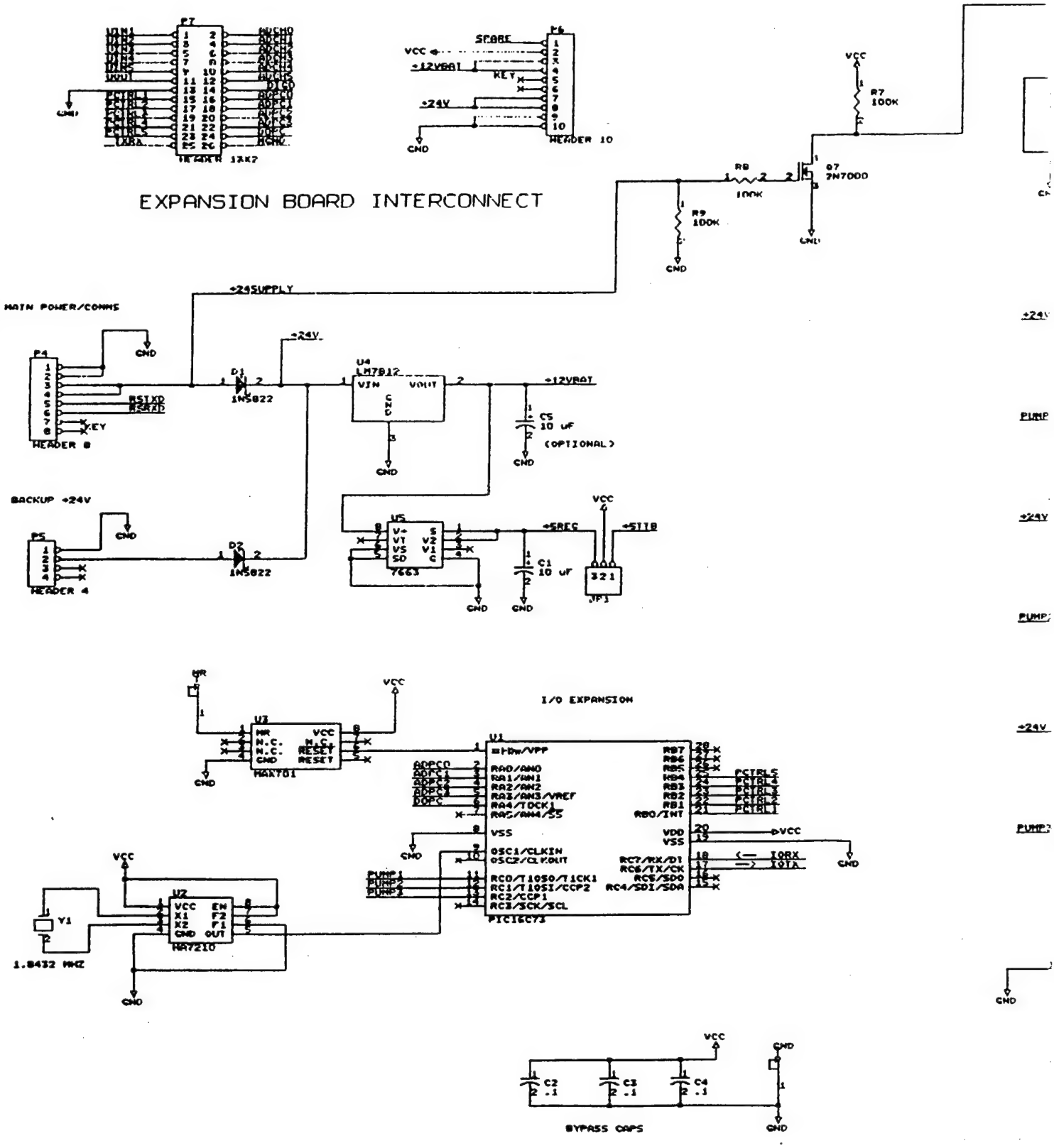
EXPANSION BOARD INTERCONNECT
P7
HEADER 12X2
P6
HEADER 10
SPARE
+12VBAT
KEY
+24V
VCC
GND
R7
100K
R8
100K
Q7
2N7000
R9
100K
+24SUPPLY
MAIN POWER/COMMS
P4
HEADER 8
D1
1N5822
U4
LM7812
VIN
VOUT
+12VBAT
C5
10 uF
(OPTIONAL)
BACKUP +24V
P5
HEADER 4
D2
1N5822
U5
7663
+5REG
+5IIB
C1
10 uF
JP1
I/O EXPANSION
U3
MAX701
MR
RESET
U1
PIC16C73
RA0/AN0
RA1/AN1
RA2/AN2
RA3/AN3/VREF
RA4/T0CKI
RA5/AN4/SS
OSC1/CLKIN
OSC2/CLKOUT
RC0/T1OSO/T1CKI
RC1/T1OSI/CCP2
RC2/CCP1
RC3/SCK/SCL
RB7
RB6
RB5
RB4
RB3
RB2
RB1
RB0/INT
VDD
VSS
RC7/RX/DT
RC6/TX/CK
RC5/SDO
RC4/SDI/SDA
PCTRL5
PCTRL4
PCTRL3
PCTRL2
PCTRL1
IORX
IOTX
U2
MAX210
Y1
1.8432 MHZ
BYPASS CAPS
C2
.1
C3
.1
C4
.1

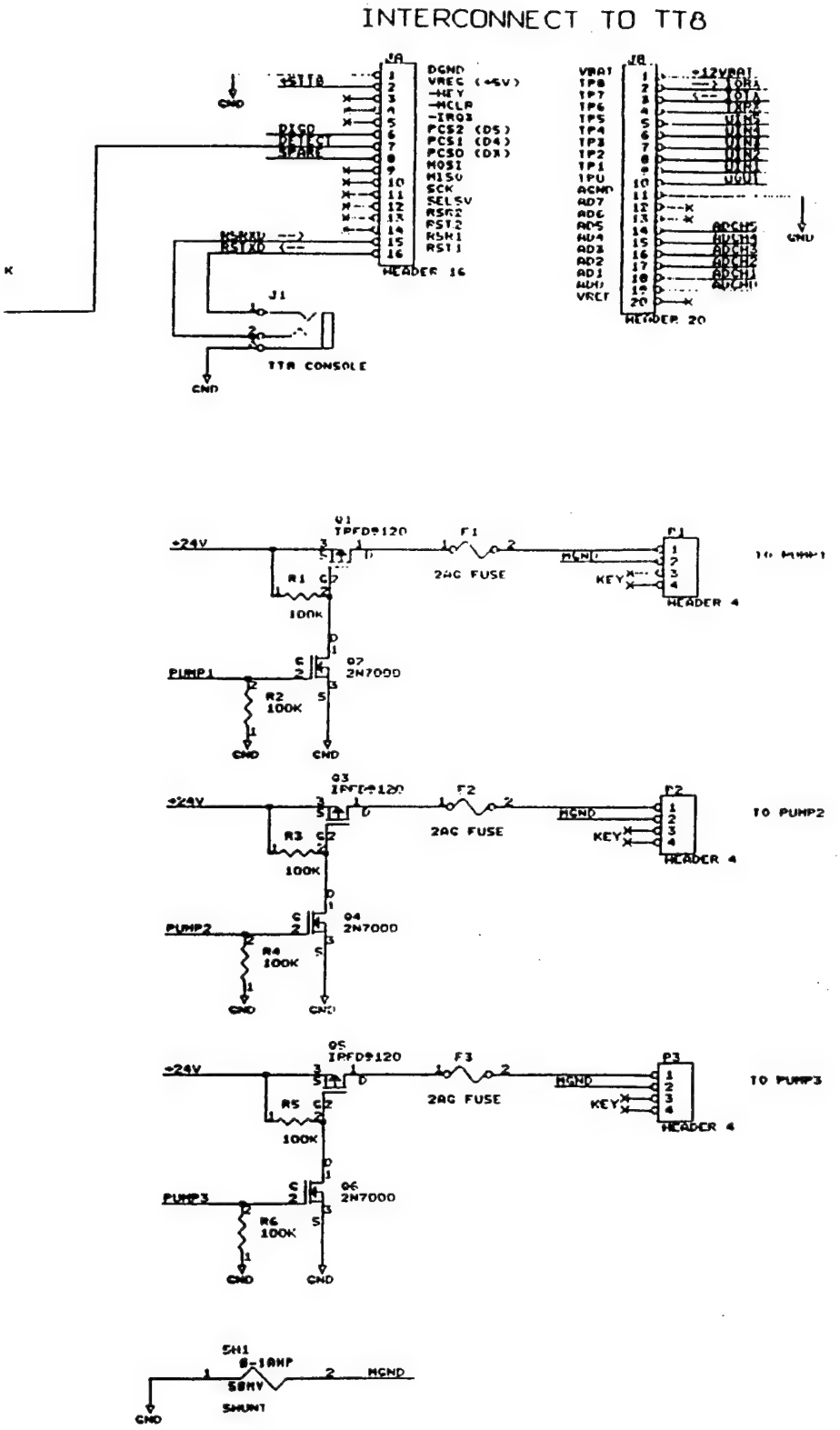


**Figure A-10**

**Schematic Diagram of Interface in Controller Module**

| | |
|---|---|
| WOODS HOLE OCEANOGRAPHIC INSTITUTION | |
| UPPER OCEAN PROCESSES GROUP<br>PHYSICAL OCEANOGRAPHY DEPT.<br>WOODS HOLE, MA 02543 USA<br>DRAWN: G.A. | |
| Title: DUST TT8 CONTROL BOARD | |
| Size: C | Document Number: DUSTT8IF.SCH — REV: - |
| Date: June 5, 1996 | Sheet 1 of 1 |

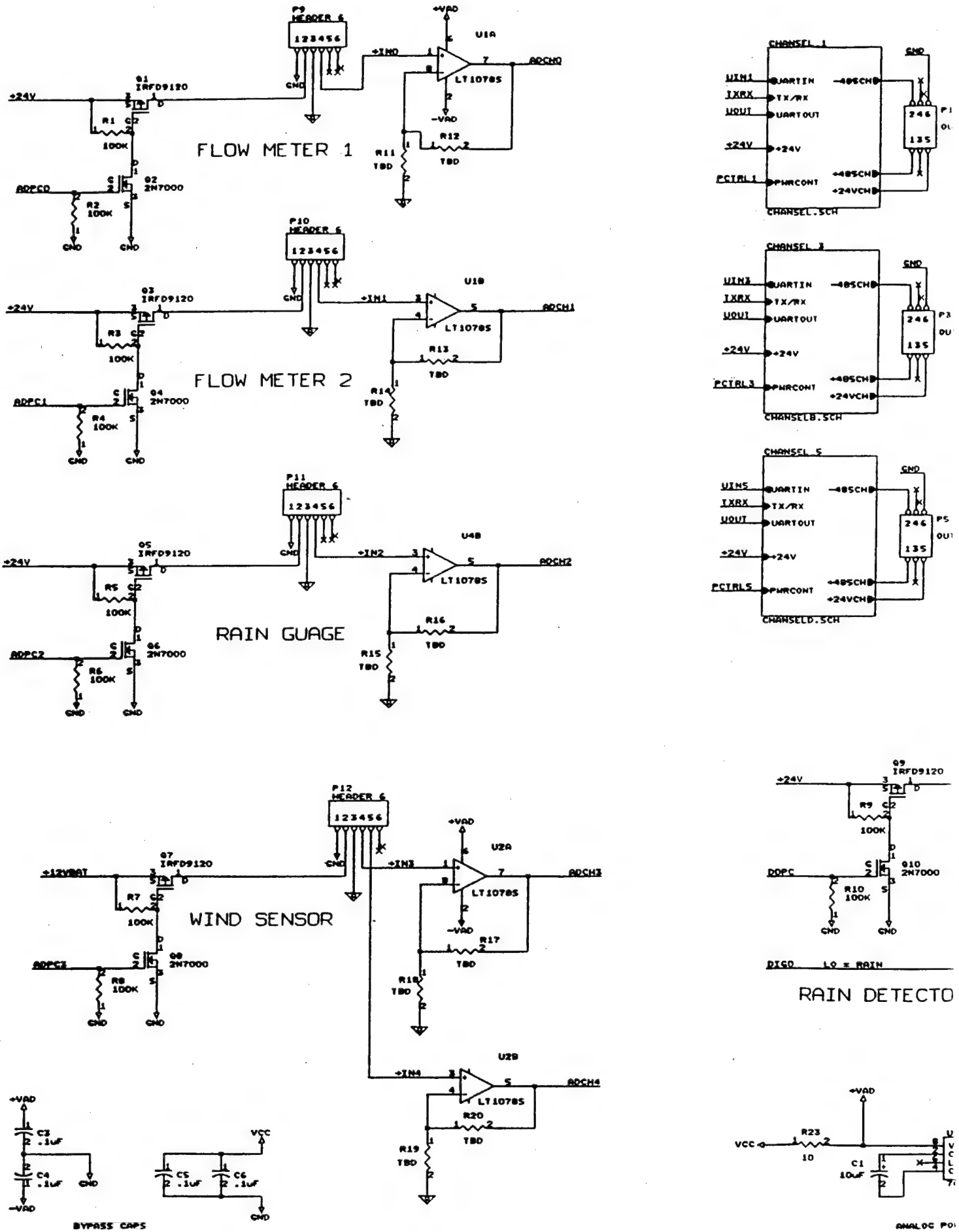
FLOW METER 1
FLOW METER 2
RAIN GUAGE
WIND SENSOR
RAIN DETECTO
BYPASS CAPS
ANALOG PO
P9 HEADER 6
P10 HEADER 6
P11 HEADER 6
P12 HEADER 6
123456
Q1 IRFD9120
Q2 2N7000
Q3 IRFD9120
Q4 2N7000
Q5 IRFD9120
Q6 2N7000
Q7 IRFD9120
Q8 2N7000
Q9 IRFD9120
Q10 2N7000
U1A
U1B
U4B
U2A
U2B
LT1078S
+24V
+12VBAT
+VAD
-VAD
VCC
GND
+IN0
+IN1
+IN2
+IN3
+IN4
ADCH0
ADCH1
ADCH2
ADCH3
ADCH4
ADPC0
ADPC1
ADPC2
ADPC3
DOPC
R1 100K
R2 100K
R3 100K
R4 100K
R5 100K
R6 100K
R7 100K
R8 100K
R9 100K
R10 100K
R11 TBD
R12 TBD
R13 TBD
R14 TBD
R15 TBD
R16 TBD
R17 TBD
R18 TBD
R19 TBD
R20 TBD
C1 10uF
C3 .1uF
C4 .1uF
C5 .1uF
C6 .1uF
R23 10
CHANSEL 1
CHANSEL.SCH
CHANSEL 3
CHANSELB.SCH
CHANSEL 5
CHANSELD.SCH
UART IN
TX/RX
UART OUT
PWRCONT
485CH
24VCH
246
135
DIGO LO = RAIN

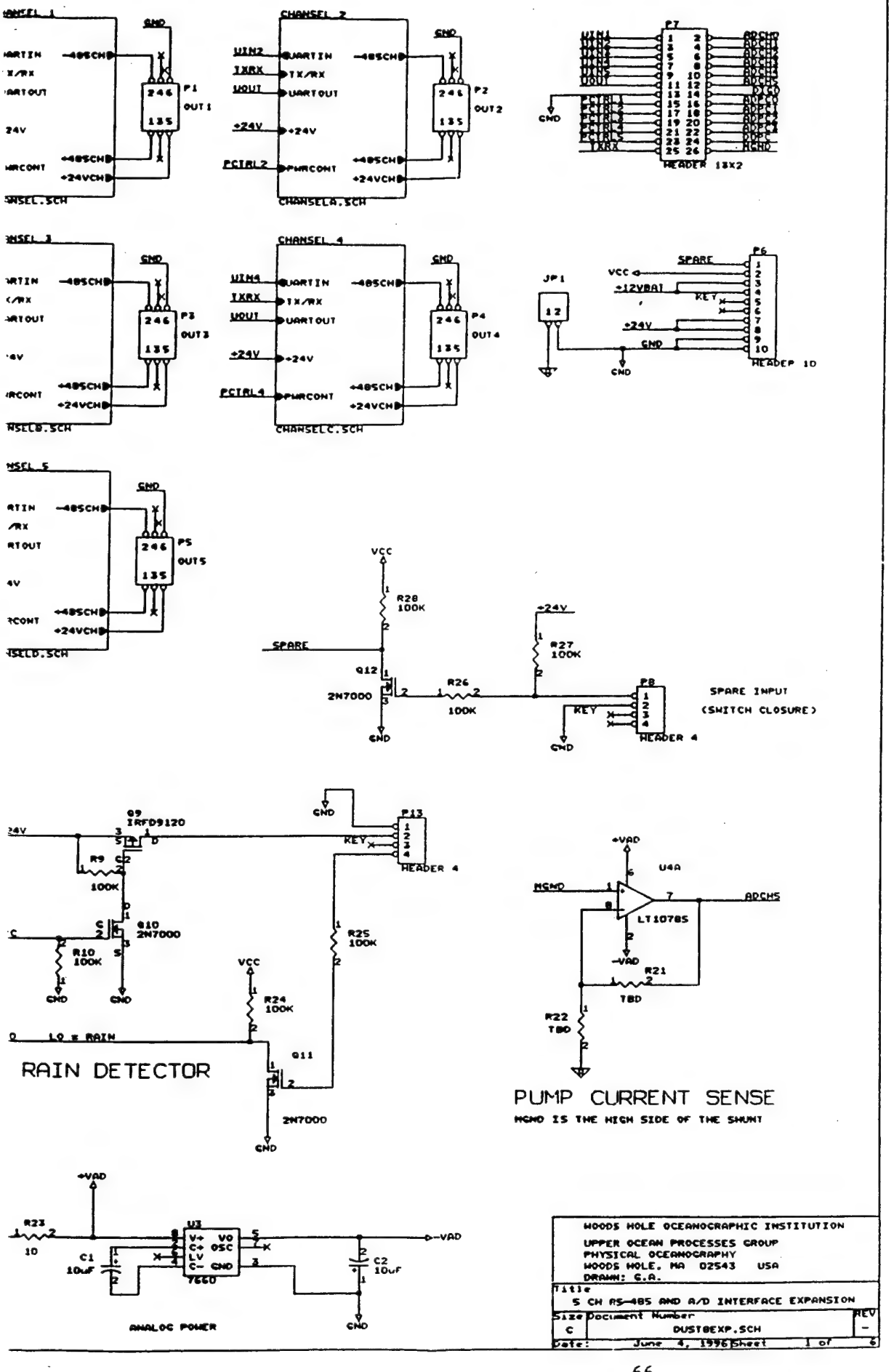


**Figure A-11**

**Schematic Diagram of Tattle Tale 8 Controller Board**

RS-485 transmit data lines are tied to a single TT8 TPU port line. Each receive data line goes to its own TT8 TPU port line. Each DSU is individually powered at +24V via fused FET switches.

Three dual OP amps (LT1078) provide signal conditioning for the 6 A/D inputs on the TT8. Power control using FET switches is also provided. A 7660 IC provides -5V supply for the OP amps (+5V is taken directly from regulated +5V VCC via a 10 ohm resistor for some noise isolation).

Two A/D channels serve the redundant pair of air flow meters used by the system; the flow meters are individually powered; connection is via connectors P9 and P10. These devices monitor the combined air flow of the 3 air pumps. One A/D channel and FET switch serves the RM Young Rain Gauge; connection is via P11. Two more A/D channels and a single FET switch are used to monitor wind speed and relative wind direction (there is no compass in the system at present). Connection is via P12, with speed signal at pin 4 and direction signal at pin 5. The 6th and last A/D channel monitors pump current flow across a shunt resistor. Except for the current flow channel, all inputs are unity gain, 0-4.095V inputs. The current shunt channel has approximately 80x gain (0 - 50 mv = 0 - 1.0 amps)

In addition to the main functions described above, there is a digital input and associated FET switch for a simple rain detector. A high level at this input (connector P13) pulls a TT8 port line low to indicate a rain drop detection. An additional spare digital input at P8 is not currently used.

### 5. Individual Dust Sample Unit (DSU)

The DSU (or filter module) consists of a filter and its holder for collecting the aerosol sample, an electrically controlled ball valve for protecting the filter, a washdown system (water reservoir, pump, and nozzles) for cleaning the air intake, and a DSU controller board. These components are housed in an environmentally sealed box and connected to the SCU via a 4 wire power/communications cable and an air hose. Block diagrams, schematics and photographs of the DSU can be found in the main text in figures 2 and 3 and photographs 1 and 2.

### 6. Dust Sample Unit Controller Board

A schematic diagram of the controller board for the dust sample unit is presented in figure A-12 (document number DUSTCTRL). The heart of the DSU controller board is a PIC16C73 micro-controller. The PIC communicates with the SCU via RS-485, accepting commands from the SCU, and responding by controlling some part of the DSU or reporting on some current state. An LM317 provides regulated +5V for the microcontroller from the +24V incoming supply from the SCU. The PIC controls two FET switches to route power to the ball valve OPEN and

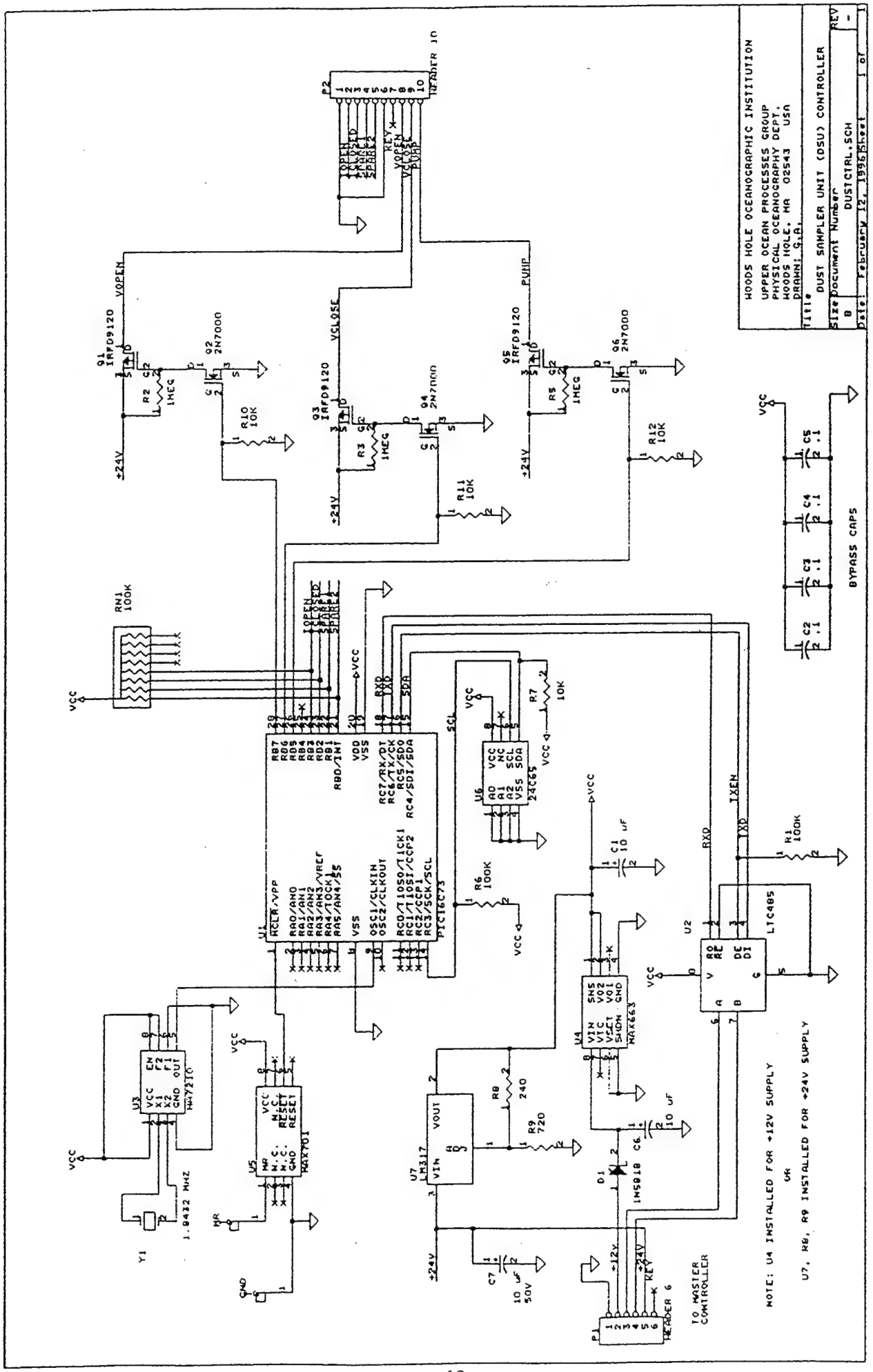


**Figure A-12: Schematic Diagram of Controller Board in Filter Module**

CLOSE inputs. Limit switches in the ball valve mechanism prevent stalling the motor/gear box, and simplify the control task. An additional set of position switches in the ball valve are monitored by two PIC port pins to indicate valve open, closed, or in-motion. A third FET power switch is used to control the washdown water pump. All three FET switches control +24V power.

## A- V. Software

This section will describe several separate pieces of software. This includes software for the TT8 main controller in the SCU, software for the PIC16C73 I/O expansion on the TT8 Control Board, software for the PIC16C73 controller on the DSU Controller Board, and PC software for conversion of the binary data stored in the PCMCIA card during the deployment. Only partial listings are provided to give a feel for the program flow of each component of the system.

The following listings for the TT8 controller software are included in printouts that follow.

1. **List A-1 and A-2: vrbls.c** and **struct.dec**: these are the global variables file and C structure declarations.

2. **List A-3: dbxmain.c** - this is the mainline code for the TT8 controller.

3. **List A-4: procmnd.c** - this is the command processor code.

The PIC I/O expansion software is given in **List A-5. dpicmain.c** is the mainline code for the very simple port expansion using the PIC. It simply gets a pair of bytes from its serial port and writes the second byte out to the PIC I/O port specified by the first byte.

PIC DSU controller software **List A-6 dctlmain.c** is the mainline code for the DSU controller. It consists mainly of command and response processing for the DSU operation.

Binary data conversion software: The captured HEX-ASCII dump from the FB command on the DUST Buoy controller is processed into an ASCII file with extension .csv. Typical filenames are DB970606.CSV (DustBuoy 1997 June 6th . Comma Separated Value). This is a file of one minute, comma separated values.

The format of a line from the .csv file follows:

year,month,day,hour,minute, wind_speed, wind_direction, precip_level, status_byte, pump_current, flow_meter_1, flow_meter_2, sample_number

For example:

97,05,28,08,00, 4.2, 188.0, 12.3, 4, 547.2, 15.2, 14.7, 1

This line is from 1997, May 28 at 08:00. Wind speed is 4.2 m/s, direction relative to buoy is 188.0 degrees. Precipitation gauge level is 12.3 mm. Status is 4 indicating NO RAIN (0 would indicate RAIN). Pump current is 547 ma. Flow meters 1 and 2 indicate 15.2 and 14.7 liters per minute
respectively. The current sample is #1.

**List A-7, dbascd.c**, is compiled on a PC using GCC. This listing is the complete processing program.

```
1   /* $modname$
2      $version$
3      $date$
4      $time$
5
6      REVISION HISTORY:
7      $log$
8   */
9
10  /*
11  ****************************************************************
12  *                                                              *
13  *  WOODS HOLE OCEANOGRAPHIC INSTITUTION                        *
14  *  UPPER OCEAN PROCESSES GROUP                                 *
15  *  PHYSICAL OCEANOGRAPHY DEPT.                                 *
16  *  WOODS HOLE, MASSACHUSETTS USA  02543                        *
17  *                                                              *
18  *  File: vrbls.c                                               *
19  *                                                              *
20  *  Function: variable declarations                             *
21  *                                                              *
22  *  Project: Dust Buoy System Controller                        *
23  *                                                              *
24  *  Programmer: G.A.                                            *
25  *                                                              *
26  *  Copyright (c) 1997 Woods Hole Oceanographic Institution     *
27  *                                                              *
28  ****************************************************************
29
30  */
31
32  /* Additional reserved words used by Aztec 'C68' and TT7
33     but not recognized by Source Print.
34     <e> ulong, ushort, uchar, asm, bool, ptr */
35
36  #include "struct.dec"
37  #include <time.h>
38  #include <tat332.h>
39  #include <tt8lib.h>
40
41  char version[] = "DUSTBUOY v1.0";
42
43  /* NOTE: these next few variables refer to main hardware UART */
44  char new_ch;        /* temp location for new char in serial interrupt */
45  bool RS232DriverOn;  /* if set,keep RS232 Driver turned On */
46  char inbuf[256];     /* interrupt input buffer for main UART */
47  char procbuf[256];   /* processing buffer */
48  bool cmnd_rdy;         /* if SET, a complete input message received */
49  char *msgptr;      /* pointer to serial buffers */
50  /* */
51
52  UeeErr ee_fail;       /* if SET, eeprom page 0 no good */
53  short uee_size;       /* size of User EEPROM space */
54  int timeout;          /* timeout flag for response */
55  struct tm *timeptr;   /* pointer to time structure */
56  time_t t;
57  int minutes;          /* FAST test multiplier - default=60 */
58  time_t start_time,stop_time;      /* general interval timing */
59  time_t current_time, next_sample_time, next_opsdata_time; /* sample timing */
60  ushort elapsed;       /* count of minutes elapsed for current sample */
61  char mod_buf[256];    /* module i/o buffer */
62  struct eeprom_image *ee_ptr;  /* pointer to EEPROM RAM image */
63  bool sample_OK;       /* flag set if OK to dust sample per 1 minute parms */
64  bool NO_rain;         /* flag set if OK to dust sample per rain detector */
65  bool GO_mode;         /* flag set if OK to begin overall operation */
66  bool date_set;        /* flag set if date & time have been set */
67  bool fast_test;        /* flag set for test mode ops */
68  bool running;         /* set if sampling is active */
69  bool flow_on;         /* true while flow meters powered up */
70  short speed;              /* wind speed counts */
71  short direction;          /* wind direction counts */
72  unsigned char adpwr;      /* current setting of a/d power control bits 1 = ON
73  unsigned char precip;     /* precipitation level counts */
74  unsigned char status;     /* status byte
75                               bit 0 - sample OK sense = 0 (Bermuda test)
```

```
76                                      bit 1 - +24v POWER OK = 0 (Bermuda test)
77                                      bit 2 - rain detect TRUE = 0
78                                      bits 3 to 7 unused
79                                      */
80      short airpump;          /* air pump current counts */
81      short flow1;            /* flow meter 1 counts */
82      short flow2;            /* flow meter 2 counts */
83      unsigned short rain_delay; /* working location for re-start delay after rain
84                                    shutdown */
85      unsigned short wind_delay; /* working location for re-start delay after wind
86                                    shutdown */
87      unsigned short sample_number; /* number of dust samples taken */
88      float wind_speed;             /* handle wind max/min checking */
89      float wind_avg;
90      float wind_sample[60];
91      short wind_index = 0;
92      short wind_count = 0;
93      unsigned char eeram[8192];    /* serial eeprom ram working area */
94      char ch0buf[128];       /* TPU 0 buffer 64 bytes + TSER_MIN_MEM (=64) */
95      char ch1buf[128];       /* TPU 1 buffer */
96      char ch2buf[128];       /* TPU 2 buffer */
97      char ch3buf[128];       /* TPU 3 buffer */
98      char ch4buf[128];       /* TPU 4 buffer */
99      char ch5buf[128];       /* TPU 5 buffer */
100     char ch7buf[128];       /* TPU 7 buffer */
101     char ch8buf[128];       /* TPU 8 buffer */
102     struct PCMCIA_sys P_sys;   /* structure contains PCMCIA and other system info */
103     struct DUST_record DUST_data;   /* structure holds time and 60 minutes of data */
104     struct PCMCIA_sys *P_sys_ptr; /* pointer to PCMCIA/system info structure */
105     struct DUST_record *DUST_ptr;   /* pointer to DUST data structure */
106     ulong addressMod;             /* PCMCIA card bank select variable (ONSET original name) */
107     ushort rec_cnt;               /* number of records used in card */
108     ushort rec_avail;             /* number of records available in card */
109     bool card_inserted;           /* card flags */
110     bool write_enabled;
111     bool erase_required;
112     bool card_full;
113     bool card_half;
114
```

```
PAGE 1 of 2 --- 24 SEP 97 ----- FILE = 14 MAY 97 11:39 -- STRUCT.DEC

/* $modname$
   $version$
   $date$
   $time$

   REVISION HISTORY:
   $log$
*/

#include <time.h>

/* note that this structure contains all deployment parameters for EEPROM */
struct eeprom_image
   {
   unsigned short duration[6];    /* sample durations in hours - 0th
                                     position is delay til first sample */
   time_t sample[5];             /* time of sample - serves as flag that
                                    sample was started also */
   time_t start;                 /* deployment start time */
   time_t stop;                  /* deployment stop time */
   unsigned short wash_time;     /* seconds of wash down time */
   unsigned short wash_delay;    /* seconds until valve open after
                                    wash is complete */
   unsigned short rain_check;    /* set to enable rain detection checking */
   unsigned short wind_check;    /* set to enable wind checking */
   unsigned short wind_max;      /* max wind speed to sample, tenths m/s */
   unsigned short wind_min;      /* min wind speed to sample, tenths m/s */
   unsigned short rain_delay;    /* minutes delay to re-start sampling after shutdown
                                    i.e. hysteresis */
   unsigned short wind_delay;    /* minutes delay to re-start sampling after shutdown
                                    i.e. hysteresis */
   };

/* this structure contains important system/PCMCIA stuff, 256 bytes */

struct PCMCIA_sys
   {
   unsigned long next_record;    /* pointer to next available record */
   unsigned short record_cnt;    /* # of 1 hr records written */
   unsigned char reserve[248];
   unsigned short sys_CRC;       /* CRC of previous 254 bytes */
   };


/* this is the DUST data record structure, 512 bytes */

struct DUST_record
   {
   time_t time1;                 /* 4 bytes ANSI time */
   short speed[60];              /* wind speed counts */
   short direction[60];          /* wind direction counts */
   unsigned char precip[60];     /* precipitation level counts */
   unsigned char status[60];     /* status byte
                                 bit 0 - sample OK sense = 0
```

```
                                bit 1 - +24v POWER OK = 0
                                bit 2 - rain detect TRUE = 0
                                bits 3 to 7 unused
                                */
   short airpump[60];           /* air pump current counts */
   short flow1;                 /* flow meter 1 (once per hour) */
   short flow2;                 /* flow meter 2 (once per hour) */
   unsigned short sample;       /* current sample number as of hour's end */
   unsigned char spare[8];
   unsigned char reserve[10];
   unsigned short used;         /* set to 0xA5A5 upon record write */
   unsigned short dust_CRC;      /* CRC of previous 510 bytes */
   };
```

**List A-3: dbxmain.c**

```
/* $modname$
   $version$
   $date$
   $time$

   REVISION HISTORY:
   $log$
*/

/*
*****************************************************************
*                                                               *
*  WOODS HOLE OCEANOGRAPHIC INSTITUTION                         *
*  UPPER OCEAN PROCESSES GROUP                                  *
*  PHYSICAL OCEANOGRAPHY DEPT.                                  *
*  WOODS HOLE, MASSACHUSETTS USA  02543                         *
*                                                               *
*  File: dbxmain.c                                              *
*                                                               *
*  Function: Dust Buoy System Controller mainline               *
*                                                               *
*  Project:                                                     *
*                                                               *
*  Programmer: G.A.                                             *
*                                                               *
*  Copyright (c) 1997 Woods Hole Oceanographic Institution      *
*                                                               *
*****************************************************************

*/

/* Additional reserved words used by Aztec 'C68' and TT7
   but not recognized by Source Print.
   <e> ulong, ushort, uchar, asm, bool, ptr */

#include <stdio.h>
#include <string.h>
#include <stdlib.h>
#include <time.h>
#include <tat332.h>
#include <tpu332.h>      /* 68332 Time Processing Unit Definitions */
#include <tt8lib.h>      /* definitions and prototypes for Model 8 library */
#include <dio332.h>
#include <userio.h>
#include "vrbls.dec"
#include "pcmcia.dec"
#include "equates.dec"

char copyright[] = "Copyright (c) 1996 Woods Hole Oceanographic Institution";
char programmer[] = "by Geoff Allsup";

void init_pins(void);
void init_storage(void);
void init_comms(void);
void getcmnd(void);
void procmnd(void);
void pre_deploy(void);
bool setup(void);
void start_sample(ushort);
void stop_sample(ushort);
void wash_valve(ushort);
void do_samplers(void);
void do_opsdata(void);
void store_data(struct DUST_record *);

void main(void)
{
   int i;

 init:
   /* Initialize standard hardware */
   InitTT8(NO_WATCHDOG,TT8_TPU); /* SEE TT8LIB.H */

   /* setup the TT8 system clock */
   SimSetFSys(147200001);
```

```
   76 |     SetTickRate(1000l);
   77 |     SerSetBaud(9600l,0l);
   78 |     SetTimeSecs((time_t)0,NULL);
   79 |     SerActivate();
   80 |
   81 |     /* message*/
   82 |     printf("\nInitializing system...\n");
   83 |
   84 |     /* initialize module-specific hardware */
   85 |     init_pins();
   86 |
   87 |     /* initialize main comms for interrupts */
   88 |     SerSetInBuf(inbuf, sizeof(inbuf));
   89 |
   90 |     /* point to processing buffer */
   91 |     msgptr = procbuf;
   92 |
   93 |     /* initialize some flags and stuff */
   94 |     cmnd_rdy = FALSE;
   95 |     running = FALSE;
   96 |     sample_number = 0;
   97 |     fast_test = FALSE;
   98 |     elapsed = 0;
   99 |     minutes = 60;
  100 |     sample_OK = TRUE; // allow immediate startup
  101 |     NO_rain = TRUE;   // allow immediate startup
  102 |     GO_mode = FALSE;
  103 |     date_set = FALSE;
  104 |     flow_on = FALSE;
  105 |     status = 0x04;
  106 |
  107 |     /* close all TPU serial channels (0 - 5, 7, 8) */
  108 |     for (i=0; i<6; i++)
  109 |        TSerClose(i);
  110 |     TSerClose(7);
  111 |     TSerClose(8);
  112 |
  113 |     /* initialize the FLASH card storage */
  114 |     init_storage();
  115 |
  116 |     /* initialize TPU for UART i/o via RS485 */
  117 |     init_comms();
  118 |
  119 |     /* be sure all PIC expansion port values left at 0, all ports OFF */
  120 |     TSerPutByte(PICTX,'A');
  121 |     TSerPutByte(PICTX,0);
  122 |     TSerPutByte(PICTX,'B');
  123 |     TSerPutByte(PICTX,0);
  124 |     TSerPutByte(PICTX,'C');
  125 |     TSerPutByte(PICTX,0);
  126 |
  127 |     /* message */
  128 |     printf("Records used: %u, Records available: %u\n",rec_cnt,rec_avail);
  129 |
  130 |     /* initialize pointer to EEPROM RAM image structure overlay */
  131 |     ee_ptr = (struct eeprom_image *)&eeram[0];
  132 |
  133 |     /* get user EEPROM size */
  134 |     uee_size = UeeSize();
  135 |
  136 |     /* next, before anything else, read the 7936 bytes of available
  137 |        user serial EEPROM into RAM. */
  138 |     ee_fail = UeeReadBlock((ushort)0,eeram,uee_size);
  139 |
  140 |     /* if failed, print error message */
  141 | //    if (ee_fail)
  142 | //       printf("Bad EEPROM block read\n");
  143 |
  144 |     /* get the current time */
  145 |     time(&t);
  146 |     timeptr = localtime(&t);
  147 |
  148 |     /* startup message */
  149 |     printf("\nDust Buoy Sampler Test\n");
  150 |     printf("Firmware %s\n",version);
```

```
151     printf("%s : %s\n",__DATE__,__TIME__);
152     printf("Ready...\n\n");
153
154     /* flush any startup garbage */
155     SerInFlush();
156
157     /*********************************************************************/
158     /* main loop */
159     while (1)
160     {
161       /* if DATE not set, wait til 'D' and 'G' commands issued on power-up
162          or just 'G' on restart */
163       if (!GO_mode)
164       {
165         /* watch for characters to process */
166         if (SerByteAvail())
167           getcmnd();
168
169         /* if a command is ready, process it */
170         if (cmnd_rdy)
171           procmnd();
172
173         /* wait a little in low power mode (no bus activity) */
174         LMDelay(0xFF);
175
176         /* update the current time */
177         time(&t);
178         timeptr = localtime(&t);
179       }
180       else
181       {
182         /* every minute, beginning upon startup, sample the rain guage,
183            rain detector, and wind, plus status, pump current and flow;
184            result of checks will toggle sampling if necessary */
185         do_opsdata();
186
187         /* now handle storage to PCMCIA if card is installed and write-enabled
188            and ready for write */
189         if ((write_enabled) && (!erase_required))
190         {
191           /* every minute, from 0 to 59, store the data in the record */
192           DUST_data.speed[timeptr->tm_min] = speed;
193           DUST_data.direction[timeptr->tm_min] = direction;
194           DUST_data.precip[timeptr->tm_min] = precip;
195           DUST_data.status[timeptr->tm_min] = status;
196           DUST_data.airpump[timeptr->tm_min] = airpump;
197
198           /* if it's the last minute of the hour, store the record in the
199              PCMCIA card */
200           if (timeptr->tm_min == 59)
201           {
202             /* store the 2 flow meter readings */
203             DUST_data.flow1 = flow1;
204             DUST_data.flow2 = flow2;
205
206             /* store the sample number at end of this hour */
207             DUST_data.sample = sample_number;
208
209             /* store the current time (this is the end of the hour) */
210             DUST_data.time1 = t;
211
212             /* tag this record as used */
213             DUST_data.used = 0xA5A5;
214
215             /* message */
216             printf("Writing record to FLASH storage\n");
217
218             /* and write the record to PCMCIA card */
219             store_data(DUST_ptr);
220
221             /* bump record pointer for next time */
222             DUST_ptr++;
223
224             /* adjust the record used and available count for status info */
225             rec_cnt++;
```

```
226                     rec_avail--;
227                  }
228               }
229
230               /* see if all 5 dust samples have been taken */
231               if (sample_number < 6)
232               {
233                  /* see if it's OK to sample */
234                  if (sample_OK && NO_rain)
235                  {
236                     /* OK to sample - is it time for the next sample (specified in
237                        hours * 60 minutes here unless in fast_test mode) */
238                     if (elapsed >= (ee_ptr->duration[sample_number] * minutes))
239                     {
240                        /* setup for next sample - first kill current sample if
241                           it's running */
242                        if (running)
243                        {
244                           /* sample running - shut it down */
245                           stop_sample(sample_number);
246
247                           /* and clear the flag */
248                           running = FALSE;
249                        }
250
251                        /* now setup for next sample - bump sample number */
252                        sample_number++;
253
254                        /* reset elapsed time for new sample */
255                        elapsed = 0;
256                     }
257
258                     /* if a sample is NOT currently running,
259                        except for dummy sample 0 - delayed start, and less
260                        than 6 */
261                     if ((sample_number > 0) && (sample_number < 6) && (!running))
262                     {
263                        /* then start it now */
264                        start_sample(sample_number);
265
266                        /* set running flag */
267                        running = TRUE;
268                     }
269                  }
270                  else  // NOT OK to sample
271                  {
272                     /* if there is a sample 1 - 5 running, shut it down */
273                     if (running && sample_number)
274                     {
275                        /* stop it */
276                        stop_sample(sample_number);
277
278                        /* and clear the flag */
279                        running = FALSE;
280                     }
281                  }
282               }
283
284               /* wait for minute to roll over, handle commands */
285               while (timeptr->tm_sec != 0)
286               {
287                  /* wait a little in low power mode (no bus activity) */
288                  LMDelay(0xFF);
289
290                  /* get time */
291                  time(&t);
292                  timeptr = localtime(&t);
293
294                  /* watch for characters to process */
295                  if (SerByteAvail())
296                     getcmnd();
297
298                  /* if a command is ready, process it */
299                  if (cmnd_rdy)
300                     procmnd();
```

```
301 |     |  |  └──}
302
303 |     |  |  /* wait for second to roll over */
304 |     |  |  while (timeptr->tm_sec == 0)
305 |     |  |  ┌──{
306 |     |  |  |  /* wait a little in low power mode (no bus activity) */
307 |     |  |  |  LMDelay(0xFF);
308
309 |     |  |  |  /* get time */
310 |     |  |  |  time(&t);
311 |     |  |  |  timeptr = localtime(&t);
312 |     |  |  └──}
313
314 |     |  |  /* finally, bump elapsed minutes count if sample is running,
315 |     |  |     or it's dummy sample 0 - delayed start */
316 |     |  |  if (running || (!sample_number))
317 |     |  |     elapsed++;
318
319 |     |  |  /* message */
320 |     //    if (sample_number < 6)
321 |     //       printf("Sample #%d elapsed: %u minutes\n",sample_number,elapsed);
322 |     |  └──}
323 |     └──} /* end of main while loop */
324 └──}
```

**List A-4: procmnd.c**

```
/* $modname$
   $version$
   $date$
   $time$

   REVISION HISTORY:
   $log$
*/

/*
*****************************************************************
*                                                               *
*  WOODS HOLE OCEANOGRAPHIC INSTITUTION                         *
*  UPPER OCEAN PROCESSES GROUP                                  *
*  PHYSICAL OCEANOGRAPHY DEPT.                                  *
*  WOODS HOLE, MASSACHUSETTS USA  02543                         *
*                                                               *
*  File: procmnd.c              Model: SMALL                    *
*                                                               *
*  Function: command processor                                  *
*                                                               *
*  Project: Dust Buoy                                           *
*                                                               *
*  Programmer: G.A.                                             *
*                                                               *
*  Copyright (c) 1997 Woods Hole Oceanographic Institution      *
*                                                               *
*****************************************************************
*/

/* Additional reserved words used by Aztec 'C68' and TT7
   but not recognized by Source Print.
   <e> ulong, ushort, uchar, asm, bool, ptr */


#include <stdio.h>
#include <string.h>
#include "equates.dec"
#include "vrbls.dec"

void d_cmnd(void);
void f_cmnd(void);
void go_cmnd(void);
void help_cmd(void);
void t_cmnd(void);
void sample_cmnd(void);
void status_cmnd(void);
void stop_cmnd(void);
void ee_update(void);
void xm_cmnd(void);

void procmnd(void)
{
   /* only a subset of commands allowed if GO has been issued */
   if (GO_mode)
   {
      /* the first letter (or only letter) in the input buffer is
         the command to process, so vector accordingly.  'msgptr' is
         set to the start of the input buffer by the serial interrupt
         when 'cmndrdy' is set */
      switch (*msgptr)
      {
         /* 'F' commands - do FLASH memory stuff */
         case 'F':
         {
            /* process the message */
            f_cmnd();

            /* and exit case */
            break;
         }

         /* 'H' command responds with help message */
         case 'H':
         case '?':
```

```
76                  {
77                  /* process the message */
78                  help_cmd();
79
80                  /* and exit case */
81                  break;
82                  }
83
84              /* 'S' command */
85              case 'S':
86                  {
87                  /* is it request for status? */
88                  if (!strncmp("STAT",msgptr,(size_t)4))
89                      /* process the message */
90                      status_cmnd();
91
92                  /* or a request to stop sampling */
93                  else if (!strncmp("STOP",msgptr,(size_t)4))
94                      /* process the message */
95                      stop_cmnd();
96
97                  /* and exit case */
98                  break;
99                  }
100
101             /* magic passwd to monitor */
102             case 'X':
103                 {
104                 /* see if it's magic passwd */
105                 if (!strcmp("XYZZY",msgptr))
106                     /* process the message */
107                     ResetToMon();
108
109                 /* and exit case */
110                 break;
111                 }
112
113             /* default is NO RESPONSE */
114             default:
115                 break;
116             }
117         }
118     else
119         {
120         /* the first letter (or only letter) in the input buffer is
121            the command to process, so vector accordingly.  'msgptr' is
122            set to the start of the input buffer by the serial interrupt
123            when 'cmndrdy' is set */
124         switch (*msgptr)
125             {
126             /* 'D' command - set date and time */
127             case 'D':
128                 {
129                 /* process the message */
130                 d_cmnd();
131
132                 /* and exit case */
133                 break;
134                 }
135
136             /* 'F' commands - do FLASH memory stuff */
137             case 'F':
138                 {
139                 /* process the message */
140                 f_cmnd();
141
142                 /* and exit case */
143                 break;
144                 }
145
146             /* 'G' command - enable sampling */
147             case 'G':
148                 {
149                 if (!strncmp("GO",msgptr,(size_t)2))
150                     /* process the message */
```

```
151                     go_cmnd();
152
153                 /* and exit case */
154                 break;
155                 }
156
157             /* 'H' command responds with help message */
158             case 'H':
159             case '?':
160                 {
161                 /* process the message */
162                 help_cmd();
163
164                 /* and exit case */
165                 break;
166                 }
167
168             /* 'S' command */
169             case 'S':
170                 {
171                 /* is it request to set sample times? */
172                 if (!strncmp("SAMP",msgptr,(size_t)4))
173                     /* process the message */
174                     sample_cmnd();
175
176                 /* is it request for status? */
177                 else if (!strncmp("STAT",msgptr,(size_t)4))
178                     /* process the message */
179                     status_cmnd();
180
181                 /* or a request to stop sampling */
182                 else if (!strncmp("STOP",msgptr,(size_t)4))
183                     /* process the message */
184                     stop_cmnd();
185
186                 /* and exit case */
187                 break;
188                 }
189
190             /* 'T' command - handle test commands */
191             case 'T':
192                 {
193                 /* process the message */
194                 t_cmnd();
195
196                 /* and exit case */
197                 break;
198                 }
199
200             /* 'U' command handles EEPROM update */
201             case 'U':
202                 {
203                 /* look for password 'OK', abort if not found */
204                 if (!strncmp("UOK",msgptr,(size_t)3))
205                     {
206                     /* process the message */
207                     ee_update();
208                     }
209
210                 /* and exit case */
211                 break;
212                 }
213
214             /* XMODE command for xmodem transfer */
215             case 'X':
216                 {
217                 /* is it a command to wait for XMODEM transfer on console port? */
218                 if (!strncmp("XMODE",msgptr,(size_t)5))
219                     {
220                     /* process the message */
221                     xm_cmnd();
222                     }
223                 /* or see if it's magic passwd */
224                 else if (!strncmp("XYZZY",msgptr,(size_t)5))
225                     /* process the message */
```

```
226                 ResetToMon();
227
228               /* and exit case */
229               break;
230             }
231
232             /* default is NO RESPONSE */
233             default:
234               break;
235           }
236         }
237
238         /* we're done processing the message, so clear the flag to allow
239            next inbound message to come in (won't be received til any
240            outbound response is complete) */
241         cmnd_rdy = 0;
242
243         /* be sure msgptr is OK */
244         msgptr = procbuf;
245
246         /* and flush any extraneous garbage in input buffer */
247         SerInFlush();
248       }
```

**List A-5: dpicmain.c**

```
#pragma option v;

/* $modname$
   $version$
   $date$
   $time$

   REVISION HISTORY:
   $log$
*/

/*
*****************************************************************
*                                                               *
*  WOODS HOLE OCEANOGRAPHIC INSTITUTION                         *
*  UPPER OCEAN PROCESSES GROUP                                  *
*  PHYSICAL OCEANOGRAPHY DEPT.                                  *
*  WOODS HOLE, MASSACHUSETTS USA  02543                         *
*                                                               *
*  File: dpicmain.c                                             *
*                                                               *
*  Function: Dust System Controller I/O Expansion
*                                                               *
*  Project:
*                                                               *
*  Programmer: G.A.                                             *
*                                                               *
*  Copyright (c) 1996 Woods Hole Oceanographic Institution      *
*                                                               *
*****************************************************************

  Timing:

   1 instruction cycle = 4 clock periods

   2.4576 MHZ clock -> .4069 uSEC period
   1 instruction cycle -> 1.6276 uSEC
*/

/* Additional reserved words used by MPC
   but not recognized by Source Print.
   <e> auto,bits,interrupt
*/


#define NOLONG     // Comment this out if using 'long' variables
#include <16C73.h>
#include "dustpic2.dec"

/* global variables */
char ch, s[10];
char i;
char far *msgptr;

/* code space message strings */
const char version[]="DUSTEXP V1.0\r\n";


/* declarations */
void initports(void);
void initserial(void);
void serint(void);
void get_rotor(void);
char inchar(void);
void outchar(char);
void delay(char);
void sendmsg(char far *);

/* ****************************************************************
*  mainline
**************************************************************** */
void main(void)
{
   /* initialize hardware */
   initports();
```

```
    initserial();

    while(1)
    {
      /* get a character */
      ch = inchar();

      /* determine port A, B, or C */
      switch (ch)
      {
        case 'A':
        {
          /* get A Port setting */
          ch = inchar();

          /* write it to Port A */
          PORTA = ch;

        break;
        }

        case 'B':
        {
          /* get B Port setting */
          ch = inchar();

          /* write it to Port B */
          PORTB = ch;

        break;
        }

        case 'C':
        {
          /* get C Port setting */
          ch = inchar();

          /* write it to Port C */
          PORTC = ch;

        break;
        }
      }

      /* echo the port setting character */
      outchar(ch);
    }
  } // main

/*********************************************************************/

/* port initialization */
#include "initport.c"

/* UART  initialization */
#include "serial.c"

/* serial port support routines */
#include "sersupt.c"
```

**List A-6: dctlmain.c**

```
1   #pragma option v;
2
3   /* $modname$
4      $version$
5      $date$
6      $time$
7
8      REVISION HISTORY:
9      $log$
10  */
11
12  /*
13  ****************************************************************
14  *                                                              *
15  *  WOODS HOLE OCEANOGRAPHIC INSTITUTION                        *
16  *  UPPER OCEAN PROCESSES GROUP                                 *
17  *  PHYSICAL OCEANOGRAPHY DEPT.                                 *
18  *  WOODS HOLE, MASSACHUSETTS USA  02543                        *
19  *                                                              *
20  *  File: dctlmain.c                                            *
21  *                                                              *
22  *  Function: DUST sampler controller (DUSTCTRL) mainline       *
23  *                                                              *
24  *  Project:                                                    *
25  *                                                              *
26  *  Programmer: G.A.                                            *
27  *                                                              *
28  *  Copyright (c) 1996 Woods Hole Oceanographic Institution     *
29  *                                                              *
30  ****************************************************************
31
32    Timing:
33
34     1 instruction cycle = 4 clock periods
35
36     2.4576 MHZ clock -> .4069 uSEC period
37     1 instruction cycle -> 1.6276 uSEC
38  */
39
40  /* Additional reserved words used by MPC
41     but not recognized by Source Print.
42     <e> auto,bits,interrupt
43  */
44
45
46  #define NOLONG      // Comment this out if using 'long' variables
47  #include <16C73.h>
48  #include "dustctrl.dec"
49
50  /* global variables */
51  char ch, s[10];
52  char i;
53  char far *msgptr;
54
55  /* code space message strings */
56  const char version[]="DUSTCTRL V1.0\r\n";
57  const char help[]="CMD: C,D,H,K,O,S,V,W\r\n";
58  const char open[]="Opening valve\r\n";
59  const char close[]="Closing valve\r\n";
60  const char killed[]="Killed valve\r\n";
61  const char pumpon[]="Wash pump ON\r\n";
62  const char pumpoff[]="Wash pump OFF\r\n";
63  const char status[]="Status\r\n";
64  const char crlf[]="\r\n";
65  const char hexasc[]="0123456789ABCDEF";
66
67
68  /* declarations */
69  void handle_TMR0(void);
70  void initports(void);
71  void initserial(void);
72  void serint(void);
73  void get_rotor(void);
74  char inchar(void);
75  void outchar(char);
```

```
76    void rx_485(void);
77    void tx_485(void);
78    void delay(char);
79    void sendmsg(char far *);
80
81
82    /* ********************************************************************
83    *  interrupt vectors
84    ******************************************************************** */
85    void __INT(void)
86    {
87       if (INTCON.T0IF) // TMR0 overflowed
88       {
89       INTCON.T0IF = 0; // Clear T0IF
90       handle_TMR0();   // Call handler
91       }
92
93       if (PIR1.RCIF || PIR1.TXIF)  // UART receive interrupt
94       {
95       serint();      // call handler
96       }
97
98       RestoreContext;
99    }
100
101   /* ********************************************************************
102   *  mainline
103   ******************************************************************** */
104   void main(void)
105   {
106      /* initialize hardware */
107      initports();
108      initserial();
109
110      // Enable desired interrupts
111      INTCON.T0IE = 1;      // Timer 0 overflow interrupt
112
113      // Enable unmasked interrupts
114   //   INTCON.GIE = 1;       // Global interrupt enable
115      INTCON.GIE = 0;       // Global interrupt disable
116
117
118      while(1)
119      {
120      /* get a character */
121      ch = inchar();
122
123      /* get a command */
124      switch (ch)
125      {
126         case 'C':
127         {
128         /* save programmer from himself - turn off the opposite valve control voltage *
129         VALVE_OPEN = 0;
130
131         /* turn on the close voltage */
132         VALVE_CLOSE = 1;
133
134         /* acknowledge with message */
135         sendmsg(close);
136
137         break;
138         }
139
140         case 'D':
141         {
142         /* turn off wash pump */
143         WASH_PUMP = 0;
144
145         /* acknowledge with message */
146         sendmsg(pumpoff);
147
148         break;
149         }
150
```

```
151         case 'H':
152         {
153           sendmsg(help);
154
155           break;
156         }
157
158         case 'K':
159         {
160           /* turn off both valve control voltages */
161           VALVE_OPEN = 0;
162           VALVE_CLOSE = 0;
163
164           /* acknowledge with message */
165           sendmsg(killed);
166
167           break;
168         }
169
170         case 'O':
171         {
172           /* save programmer from himself - turn off the opposite valve con
173           VALVE_CLOSE = 0;
174
175           /* turn on the open voltage */
176           VALVE_OPEN = 1;
177
178           /* acknowledge with message */
179           sendmsg(open);
180
181           break;
182         }
183
184         case 'S':
185         {
186           /* convert status byte low nibble to hex */
187           ch = hexasc[PORTB & 0x0F];
188
189           /* disable receive */
190           RCSTA.CREN = 0;
191
192           /* set to transmit */
193           tx_485();
194
195           /* send character */
196           outchar(ch);
197
198           /* and crlf */
199           sendmsg(crlf);
200
201           break;
202         }
203
204         case 'V':
205         {
206           sendmsg(version);
207
208           break;
209         }
210
211         case 'W':
212         {
213           /* turn on wash pump */
214           WASH_PUMP = 1;
215
216           /* acknowledge with message */
217           sendmsg(pumpon);
218
219           break;
220         }
221
222         default:
223           break;
224
225       } /* end switch */
```

```
│     └─} /* end while */
└─} /* main */

/*****************************************************************/

/* port initialization */
#include "initport.c"

/* UART   initialization */
#include "serial.c"


/* serial port support routines */
#include "sersupt.c"

/* interrupt handlers - not implemented yet */
#include "inthandl.c"

```

**List A-7: dbascd.c**

```
/* Program dbascd.c
*
*   Rev 1.0 - 12 Jun 97
*
*   Program to read the 'FB' command dump capture file of the TT8 FLASH card
*   produced by G. Allsup for dust sampler data collection.
*
*   This version converts ANSI time word to year,month,day,hour,min and
*   applies standard cal factors to the raw data:
*
*     speed:          m/s = counts * 0.05
*     direction:      degrees = counts * 0.1
*     prc level:      mm = counts * 0.1952
*     pump current:   ma = counts * 0.25
*     flow meters:    lpm = counts * 0.004
*
*
*
*  REVISION HISTORY:
*
*     Rev 1.0 - 12 Jun 97 - for use with DUST BUOY v1.0 TT8 software
*
*
*   Compile with gcc 2.7.2 command line: gcc -o dbasc.exe dbasc.c
*
*   Usage: dbascd datafile outputfile
*          datafile   - tt8 fb capture file name
*          outputfile - ascii data file name
*/

#include <stdio.h>
#include <string.h>
#include <stdlib.h>
#include <time.h>

/* this is the DUST data record structure, 512 bytes */
struct DUST_record
{
  time_t time1;                 /* 4 bytes ANSI time */
  short speed[60];               /* wind speed counts */
  short direction[60];           /* wind direction counts */
  unsigned char precip[60];      /* precipitation level counts */
  unsigned char status[60];      /* status byte
                                 bit 0 - sample OK sense = 0
                                 bit 1 - +24v POWER OK = 0
                                 bit 2 - rain detect TRUE = 0
                                 bits 3 to 7 unused
                                 */
  short airpump[60];             /* air pump current counts */
  short flow1;                   /* flow meter 1 (once per hour) */
  short flow2;                   /* flow meter 2 (once per hour) */
  unsigned short sample;         /* current sample number as of hour's end */
  unsigned char spare[8];
  unsigned char reserve[10];
  unsigned short used;           /* set to 0xA5A5 upon record write */
  unsigned short dust_CRC;       /* CRC of previous 510 bytes */
};

/* temporary storage for 1 record */
struct DUST_record DUST_data;

struct tm *dbxtime;
time_t ttmp;


/* this is the usage string */
char usage[] = "\nUsage: dbascd datafile outputfile\n\
          datafile   - tt8 fb capture file name\n\
          outputfile - ascii data file name\n";

/* main program */
main(argc,argv)
int argc;
char *argv[];
{
```

```
76
77      FILE *fd1,*fd2;
78      char start[100];
79      char stop[100];
80      char *ptr;
81      unsigned char cvar;
82      unsigned short ivar;
83      unsigned long lvar;
84      int ret;
85      int i,j,k;
86      struct tm t;
87
88      /* first check for enough arguments */
89      if ( argc <  2 )
90      {
91        printf("%s",usage);
92        exit(-1);
93      }
94
95      /* argv[0] is the program name - skip it */
96      i = 1;
97
98      /* input file name */
99      fd1 = fopen(argv[i],"r");
100     if ( fd1 == NULL )
101     {
102       printf("\nUnable to open input file %s\n",argv[i]);
103       printf("%s",usage);
104       exit(-1);
105     }
106
107     /* bump to next argument */
108     i++;
109
110     /* output file name */
111     fd2 = fopen(argv[i],"w");
112     if ( fd2 == NULL )
113     {
114       printf("\nUnable to open output file %s\n",argv[i]);
115       printf("%s",usage);
116       exit(-1);
117     }
118
119     /* main loop - break out on EOF or completion */
120     i=1;
121     while (1)
122     {
123       /* read 1 long (ANSI time) */
124       ret = fscanf(fd1,"%08x",&lvar);
125       if (feof(fd1))
126         break;
127 //      fprintf(fd2,"\n%s",ctime((time_t *)&lvar));
128       DUST_data.time1 = lvar;
129
130       /* read 60 shorts (speed) */
131       for ( j = 0; j < 60; j++ )
132       {
133         /* read some bytes - shorts */
134         ret = fscanf(fd1,"%04x",&ivar);
135         if ( ret == EOF )
136           break;
137         DUST_data.speed[j] = ivar;
138       }
139
140       /* read 60 shorts (direction) */
141       for ( j = 0; j < 60; j++ )
142       {
143         /* read some bytes - shorts */
144         ret = fscanf(fd1,"%04x",&ivar);
145         if ( ret == EOF )
146           break;
147         DUST_data.direction[j] = ivar;
148       }
149
150       /* read 60 chars (precip) */
```

```
151         for ( j = 0; j < 60; j++ )
152         {
153           /* read some bytes - chars */
154           ret = fscanf(fd1,"%02x",&cvar);
155           if ( ret == EOF )
156             break;
157           DUST_data.precip[j] = cvar;
158         }
159
160         /* read 60 chars (status) */
161         for ( j = 0; j < 60; j++ )
162         {
163           /* read some bytes - chars */
164           ret = fscanf(fd1,"%02x",&cvar);
165           if ( ret == EOF )
166             break;
167           DUST_data.status[j] = cvar;
168         }
169
170         /* read 60 shorts (air pump current) */
171         for ( j = 0; j < 60; j++ )
172         {
173           /* read some bytes - shorts */
174           ret = fscanf(fd1,"%04x",&ivar);
175           if ( ret == EOF )
176             break;
177           DUST_data.airpump[j] = ivar;
178         }
179
180         /* read 3 shorts (flow1, flow2, sample) - once per hour */
181         ret = fscanf(fd1,"%04x",&ivar);
182         if ( ret == EOF )
183           break;
184         DUST_data.flow1 = ivar;
185         ret = fscanf(fd1,"%04x",&ivar);
186         if ( ret == EOF )
187           break;
188         DUST_data.flow2 = ivar;
189         ret = fscanf(fd1,"%04x",&ivar);
190         if ( ret == EOF )
191           break;
192         DUST_data.sample = ivar;
193
194         /* read 18 chars (spare) */
195         for ( j = 0; j < 18; j++ )
196         {
197           /* read some bytes - chars */
198           ret = fscanf(fd1,"%02x",&cvar);
199           if ( ret == EOF )
200             break;
201         }
202
203         /* read 2 shorts (used, CRC) - once per hour */
204         ret = fscanf(fd1,"%04x",&ivar);
205         if ( ret == EOF )
206           break;
207         DUST_data.used = ivar;
208
209         ret = fscanf(fd1,"%04x",&ivar);
210         if ( ret == EOF )
211           break;
212         DUST_data.dust_CRC = ivar;
213
214         /* print message & bump count */
215         printf("record = %5d\r",i);
216         i++;
217
218         /* process and write out the record, one minute per line */
219         for ( j = 0; j < 60; j++ )
220         {
221           /* first time for this minute - recorded at 59th minute, so
222              subtract out the extra 60 seconds for each minute */
223   //        fprintf(fd2,"%lu,",DUST_data.time1 - 3540 + (j * 60));
224           ttmp = DUST_data.time1 - 3540 + (j * 60);
225           dbxtime = gmtime(&(ttmp));
```

```
226         fprintf(fd2,"%.2d,",dbxtime->tm_year);
227         fprintf(fd2,"%.2d,",dbxtime->tm_mon + 1);
228         fprintf(fd2,"%.2d,",dbxtime->tm_mday);
229         fprintf(fd2,"%.2d,",dbxtime->tm_hour);
230         fprintf(fd2,"%.2d,",dbxtime->tm_min);
231   //          fprintf(fd2,"%.2d,",dbxtime->tm_sec);
232
233         /* speed for this minute */
234         fprintf(fd2,"%6.1f,",(float)DUST_data.speed[j] * 0.05);
235
236         /* direction for this minute */
237         fprintf(fd2,"%6.1f,",(float)DUST_data.direction[j] * 0.1);
238
239         /* precip for this minute */
240         fprintf(fd2,"%6.1f,",(float)DUST_data.precip[j] * 0.1952);
241
242         /* status for this minute */
243         fprintf(fd2,"%2u,",(unsigned short)DUST_data.status[j]);
244
245         /* air pump current for this minute */
246         fprintf(fd2,"%6.1f,",(float)DUST_data.airpump[j] * 0.25);
247
248         /* flow1 for this minute (only updated hourly at minute 59) */
249         fprintf(fd2,"%6.1f,",(float)DUST_data.flow1 * 0.004);
250
251         /* flow2 for this minute (only updated hourly at minute 59) */
252         fprintf(fd2,"%6.1f,",(float)DUST_data.flow2 * 0.004);
253
254         /* sample number (1 - 6) for this minute */
255         fprintf(fd2,"%2u\n",DUST_data.sample);
256       }
257
258       /* this record done - used value and newline to break up records */
259   //    fprintf(fd2,"%.2u\n",DUST_data.used);
260
261       /* look for EOF */
262       if (feof(fd1))
263         break;
264     } /* end while */
265
266   end:
267     /* clean up */
268     fclose(fd1);
269     fclose(fd2);
270   }
```

## DOCUMENT LIBRARY

*Distribution List for Technical Report Exchange – September 1997*

University of California, San Diego
SIO Library 0175C
9500 Gilman Drive
La Jolla, CA 92093-0175

Hancock Library of Biology & Oceanography
Alan Hancock Laboratory
University of Southern California
University Park
Los Angeles, CA 90089-0371

Gifts & Exchanges
Library
Bedford Institute of Oceanography
P.O. Box 1006
Dartmouth, NS, B2Y 4A2, CANADA

NOAA/EDIS Miami Library Center
4301 Rickenbacker Causeway
Miami, FL 33149

Research Library
U.S. Army Corps of Engineers
Waterways Experiment Station
3909 Halls Ferry Road
Vicksburg, MS 39180-6199

Institute of Geophysics
University of Hawaii
Library Room 252
2525 Correa Road
Honolulu, HI 96822

Marine Resources Information Center
Building E38-320
MIT
Cambridge, MA 02139

Library
Lamont-Doherty Geological Observatory
Columbia University
Palisades, NY z10964

Library
Serials Department
Oregon State University
Corvallis, OR 97331

Pell Marine Science Library
University of Rhode Island
Narragansett Bay Campus
Narragansett, RI 02882

Working Collection
Texas A&M University
Dept. of Oceanography
College Station, TX 77843

Fisheries-Oceanography Library
151 Oceanography Teaching Bldg.
University of Washington
Seattle, WA 98195

Library
R.S.M.A.S.
University of Miami
4600 Rickenbacker Causeway
Miami, FL 33149

Maury Oceanographic Library
Naval Oceanographic Office
Building 1003 South
1002 Balch Blvd.
Stennis Space Center, MS, 39522-5001

Library
Institute of Ocean Sciences
P.O. Box 6000
Sidney, B.C. V8L 4B2
CANADA

National Oceanographic Library
Southampton Oceanography Centre
European Way
Southampton SO14 3ZH
UK

The Librarian
CSIRO Marine Laboratories
G.P.O. Box 1538
Hobart, Tasmania
AUSTRALIA 7001

Library
Proudman Oceanographic Laboratory
Bidston Observatory
Birkenhead
Merseyside L43 7 RA
UNITED KINGDOM

IFREMER
Centre de Brest
Service Documentation - Publications
BP 70 29280 PLOUZANE
FRANCE

50272-101

| REPORT DOCUMENTATION PAGE | 1. REPORT NO. WHOI-98-01 | 2. | 3. Recipient's Accession No. |
|---|---|---|---|

**4. Title and Subtitle**
Development of an Autonomous Aerosol Sampler for Ocean Buoys and Land Sites

**5. Report Date**
January 1998

**6.**

**7. Author(s)** Edward Sholkovitz, Geoffrey Allsup, Richard Arthur, and David Hosom; WHOI
Kevin McKenney, MIT

**8. Performing Organization Rept. No.**
WHOI-98-01

**9. Performing Organization Name and Address**

Woods Hole Oceanographic Institution
Woods Hole, Massachusetts 02543

**10. Project/Task/Work Unit No.**

**11. Contract(C) or Grant(G) No.**
(C) OCE-943212
(G)

**12. Sponsoring Organization Name and Address**

National Science Foundation

**13. Type of Report & Period Covered**
Technical Report

**14.**

**15. Supplementary Notes**
This report should be cited as: Woods Hole Oceanog. Inst. Tech. Rept., WHOI-98-01.

**16. Abstract (Limit: 200 words)**

The authors have successfully designed, built and tested an aerosol sampler which is capable of collecting, in an unattended manner, a time-series set of aerosol samples (aerosol-embedded filters) from moored ocean buoys and remote areas on land. Research on aerosols, in particular, and atmospheric chemistry, in general, has not been previously attempted from buoys. Aerosols entering and leaving the ocean play an important role in climate change, ocean productivity, pollutant transport and atmospheric optics.

This report discusses (1) the scientific applications of a buoy-mounted aerosol sampler, (2) the advantages of using buoys as research platforms and (3) the authors' new instrument. Also dicsussed are the results of a four month test of the aerosol sampler on the AEROCE (Atmosphere/Ocean Chemistry Experiment) tower in bermuda and the results of a three month test on a buoy moored in Vineyard Sound off Woods Hole, MA, USA. The direct comparison between WHOI filters and AEROCE filters from the Bermuda tower is very encouraging as the Fe concentrations of aerosols compare to within 10–15% over a wide range of values. Aerosol sampling from a buoy moored in coastal waters was successfully tested under a variety of atmospheric and oceanic conditions.

**17. Document Analysis** **a. Descriptors**
aerosols
buoys
air-sea interface

**b. Identifiers/Open-Ended Terms**

**c. COSATI Field/Group**

| 18. Availability Statement | 19. Security Class (This Report) | 21. No. of Pages |
|---|---|---|
| Approved for public release; distribution unlimited. | UNCLASSIFIED | 96 |
| | 20. Security Class (This Page) | 22. Price |

(See ANSI-Z39.18) *See Instructions on Reverse*

OPTIONAL FORM 272 (4-77)
(Formerly NTIS-35)
Department of Commerce